AV8365DN

Arecont Vision
megapixel technology...
beyond imagination

8 Megapixel H.264 Day/Night 360° Panoramic IP-camera

AV8365DN (Day/Night) **AV8365DN - HB (Day/Night with Heater & Blower)**

H.264 Day/Night SurroundVideo® Series

Arecont Vision Advantages:

All-in-one H.264 Day/Night SurroundVideo® Solution
- Integrated four 2 megapixel cameras, IR corrected lenses, Day/Night switchers and IP66 dome housing
- Vandal resistant aluminum chassis with 5.5" polycarbonate dome bubble
- Easily adjustable 2-axis camera gimbal with 360° pan and 90° tilt
- Supports both H.264 and MJPEG at full resolutions and full frame rates
- Heater and blower kit versions for cold climate environments
- Hard ceiling mount and Surface mount with optional pendant mount and wall mount
- IP66 weatherproofing standard

+/- 10° tilt Adjustment to Locate Sensor Position
- Four independent sensor position adjustment to meet user requirement

H.264 (MPEG4, Part 10) Compression Standard
- Simultaneous support of both H.264 and MJPEG
- 10x average bandwidth and storage reduction over MJPEG

World's First H.264 Panoramic Megapixel Cameras
- 8 megapixel 360° field of view

Bit Rate Control
- Maintain desired bandwidth and storage size

Real Time Streaming Protocol (RTSP)
- Allows for compatibility with media players such as Apple QuickTime, Windows Media Player, VLC Player, etc.

Superior Low Light Performance
- 1/2" CMOS sensor

High Definition Panoramic 360° Imaging
- No de-warping software required

Unparalleled High Definition Resolution - 1600 x 1200
- Resolution up to 1600(H) x 1200(V) per sensor
- Total resolution: 6400(H) x 1200(V) - (4 x 2 MP)
- Substitute up to twenty-four analog cameras

Fastest MegaPixel Image Rates
- Up to 22fps per channel

Forensic Zooming
- Zoom live or after-event while recording full field of view in HD ... replace PTZ devices

Reduced Overall System Cost
- Less cameras to install, less wiring, no external power (POE), less NVR licensing fees

Other key features:
- Moonlight™ Mode - extended exposure and proprietary noise cancellation
- Up to four regions of interest for simultaneous panoramic and digital PTZ viewing and recording
- Image cropping to discard unnecessary scene and more

The AV8365DN network camera is a part of Arecont Vision's full line of H.264 megapixel cameras. This fully compliant implementation of H.264 (MPEG 4, Part 10) is capable of sustaining over 80 billion operations per second and maintaining full motion progressive scan 1600 x 1200 video at 22 fps. Part of the SurroundVideo® line of cameras, it offers bandwidth and storage efficiency of 10X greater on average over MJPEG counterparts.

Learn more about our products at ***www.arecontvision.com***

www.arecontvision.com avsales@arecontvision.com +1.818.937.0700 877.CAMERA.8

Specifications

AV8365DN

8 Megapixel H.264 Day/Night 360° Panoramic IP-camera

Model Numbers:

AV8365DN - Day/Night
AV8365DN-HB - Day/Night w/Heater & Blower

Imaging

- Four 2 megapixel CMOS image sensors
- 1600(H) x 1200(V) pixel array each sensor
- ½" optical format
- Bayer mosaic RGB filter
- Minimum illumination of:
  - Color: 0.2 lux @ F2.0
  - Day/Night: 0 lux, IR sensitive
- Dynamic range 61 dB
- Maximum SNR 50 dB
- Moonlight™ mode - extended exposure and proprietary noise cancellation

Full Field of View (FOV) Resolutions

- 1600(H) x 1200(V) x 4 — 8 megapixel total
- 800(H) x 600 (V) x 4 — 2 MP total (1/4 resolution)

Data Transmission

- Video frame rate up to:
  - 88 fps @ 800x600
  - 22 fps @ 1600x1200
  - 5.5 fps @ 6400x1200
- Compression type
  - H.264 (MPEG4, Part 10)
  - Motion JPEG
  - 21 levels of quality
- TFTP, HTTP, RTSP, RTP/TCP, RTP/UDP image transmission protocols
- 100Base-T Ethernet Network Interface
- Data rate
  - bit rate control from 100Kbps to 10Mbps
  - bit rate control available for full view, multi-view and archive
  - unthrottled data rate up to 55Mbps
- Multi-streaming: 8 non-identical streams

Programmability

- Auto exposure (AE) and Gain Control (AGC) >120dB
- On-camera motion detection with 64 detection zones
- Programmable backlight compensation
- Auto multi-matrix white balance
- 50/60Hz selectable flicker control
- Electronic pan, tilt, zoom (PTZ)
- Electronic image rotation - upside-down image turn
- Resolution windowing down to 32x32 pixels window
- Programmable motion blurring control for low-light mode
- Moonlight™ mode - extended exposure and proprietary noise cancellation
- Programmable resolution, brightness, saturation, gamma, sharpness, tint
- Up to four regions of interest for simultaneous panoramic and digital PTZ viewing and recording

Electrical

- General purpose opto-coupled input and output
- Power over Ethernet (PoE): PoE 802.3af
- Auxiliary power: 12-48VDC and 24VAC
- Power consumption 9 Watts maximum

Mechanical

- Easily adjustable 2-axis camera gimbal with 360° pan and 90° tilt
- Hard ceiling mount and surface mount embedded
- +/- 10° tilt adjustment to locate sensor position
- Conduit fit 3/4" NPT standard
- Die-cast aluminum chassis with 5.5" vandal resistant polycarbonate dome bubble
- Total Unit dimensions:
  - Ø6.8 x 6.9 in (H), bubble only: Ø5.5 x 3.4 in (H)
  - Ø175 x 176 mm (H), bubble only: Ø140 x 87 mm (H)
  - 2.0 lbs (0.91 kg)

Made in USA

AV8365DN: 360° Field of View

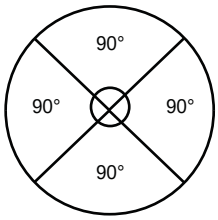

Regulatory Approvals

- FCC Class A
- CE and RoHS compliant

Heater & Blower Electrical

- Voltage Input: 12V to 20V DC/24VAC (separate power required)
- Power Output: 11W Max (DC12V); 13W Max (AC24V)
- Heater Switch: On: 17C° (62.6 °F), Off: 30 °C (86 °F)
- Blower Switch: On: 10C° (50°F), Off: 15 °C (59 °F)
- Blower Switch: On: 50C° (122 °F), Off: 45 °C (113°F)

Environmental

- IP66 weatherproofing standard
- Operating temperature:
  - No Heater: 0°C (32 °F) to +55°C (131 °F)
  - With Heater: -30°C (-22 °F) to +55°C (131 °F)
- Storage temperature: -40 °C (-40 °F) to 60 °C (140 °F)
- Humidity 0% to 90% (non condensing)

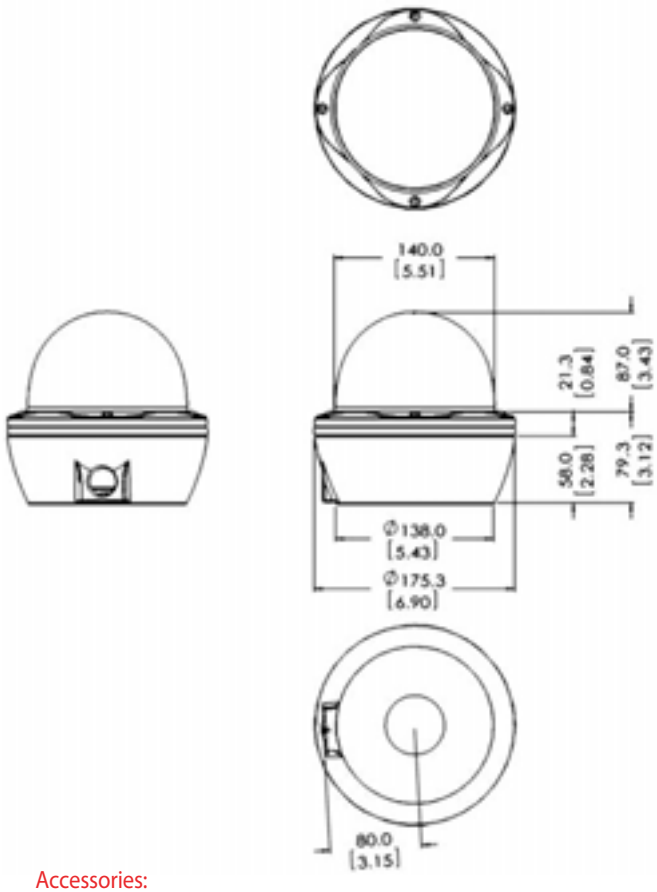

Accessories:

- SV-WMT - Indoor/Outdoor Wall Mount
- SV-CMT - Indoor/Outdoor Ceiling Mount
- SV-FMA - Indoor/Outdoor Flush Mount Adapter
- MD-PMA - Indoor/Outdoor Pole Mount Adapter
- MD-CRMA - Indoor/Outdoor Corner Mount Adapter
- MV-EBA - Indoor/Outdoor Electrical Box Adapter

Arecont Vision
megapixel technology...
beyond imagination

Revised on 12.13.10

Arecont Vision reserves the right to change products or specifications without notice ©2008 Arecont Vision