ITEM NO.	DESCRIPTION	QTY.
1	SNAP FIT INLINE KEYSTONE COUPLER	1

CATALOG NUMBER	COLOR	DESCRIPTION
SFC5EW	WHITE	SNAP FIT, CAT 5e INLINE KEYSTONE COUPLER
SFC5EBK	BLACK	SNAP FIT, CAT 5e INLINE KEYSTONE COUPLER
SFC5ECOGY	GRAY	SNAP FIT, 10/100 X-OVER INLINE KEYSTONE COUPLER

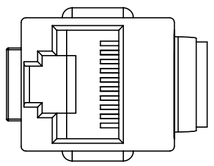

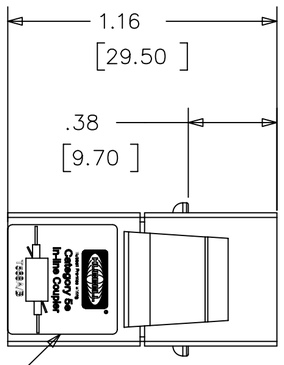

LABEL STICKER

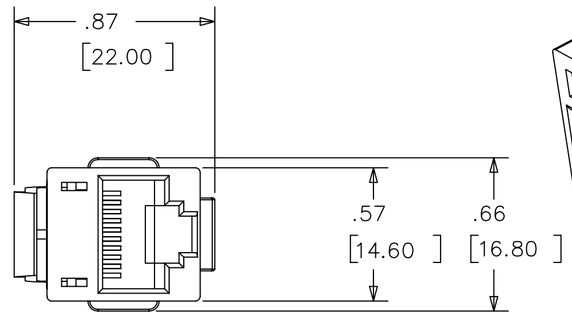

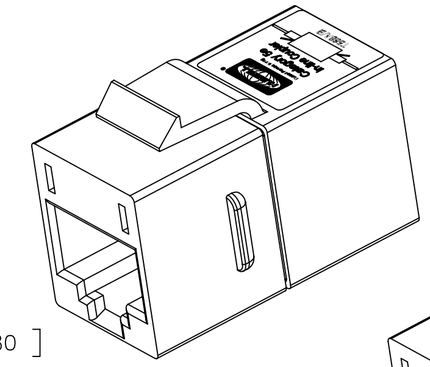

PASS THRU COUPLER

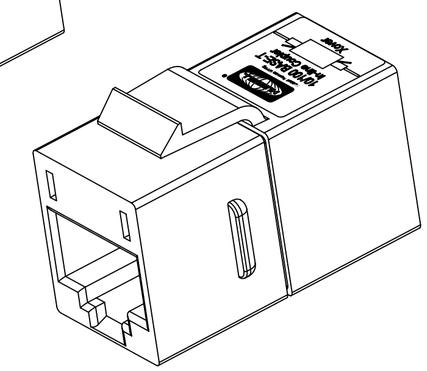

CROSSOVER COUPLER

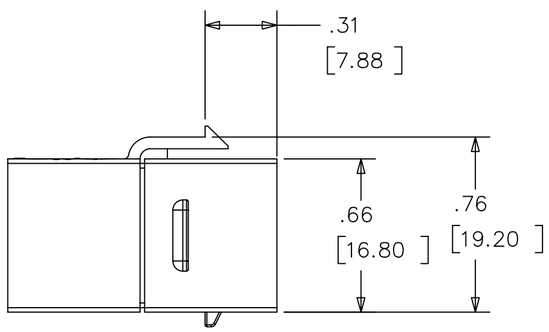

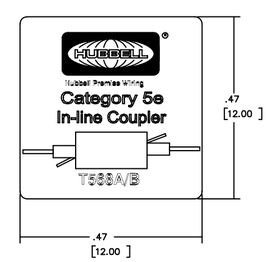

PASS THRU COUPLER LABEL

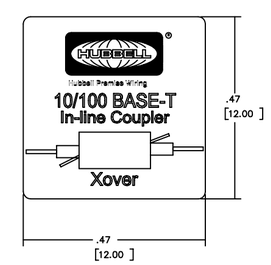

CROSSOVER COUPLER LABEL

NOTES
UNLESS OTHERWISE SPECIFIED:

1. SOLD IN CARTON INCREMENTS ONLY. CARTON CONTAINS 25 MODULES (INDIVIDUALLY BAGGED).
2. COLOR REFERS TO THE SNAP FIT BODY.
3. STANDARD KEYSTONE LATCHING.
4. SPECIFICATIONS SUBJECT TO CHANGE WITHOUT NOTICE.

REV.	ECN	DATE	DESCRIPTION	CHG BY	APPD BY
A	5979	10/29/02	INITIAL RELEASE	MMA	

Created on AUTOCAD

DIMENSIONING AND TOLERANCE PER ANSI Y14.5M-1982
UNLESS OTHERWISE SPECIFIED, DIMENSIONS ARE IN INCHES (MM).
TOLERANCES
.XX = ±.01 (.25)
.XXX = ±.005 (.127)
.XXXX = ±.0025 (.0635)
ANGLE TOL ±1°

IN ACCEPTING OUR DRAWINGS, BLUEPRINTS, OR SUPPORTING DOCUMENTATION FOR QUOTATION OR OTHER PURPOSES, YOU AGREE NOT TO DISCLOSE TO OTHERS THE IDEAS, INFORMATION, OR DESIGNS SHOWN HEREIN, AND THAT YOU WILL MAKE NO USE OF SAME WITHOUT PERMISSION

PROJECT REFERENCE:

MATERIAL:

DRAWN BY: M. ABBY 12/05/06

CHECKED BY:

APPROVED BY:

Hubbell Premise Wiring
HUBBELL INCORPORATED (Delaware)
14 Lord's Hill Road, Stonington, Connecticut 06378

TITLE: JACKS/CONNECTORS
MULTIMEDIA SNAP FIT (SF) MODULES
SNAP FIT, CAT 5e INLINE KEYSTONE COUPLER

SIZE: C
DRAWING NO.: HWS12476C
REV.: A
SCALE: 1/1
SHEET 1 OF 1