ITEM NO.	DESCRIPTION	QTY.
1	FRAME, 3 PORT ISF	1
2	SCREW,6-32 PAN HD-SPECIAL	2
3	INSTRUCTION SHEET, ISF SERIES	1

CATALOG NUMBER	COLOR	DESCRIPTION
ISF3BK	BLACK	FRAME, 3 PORT ISF
ISF3EI	ELECTRIC IVORY	FRAME, 3 PORT ISF
ISF3OW	OFFICE WHITE	FRAME, 3 PORT ISF
ISF3GY	GREY	FRAME, 3 PORT ISF
ISF3W	WHITE	FRAME, 3 PORT ISF
ISF3AL	ALMOND	FRAME, 3 PORT ISF
ISF3LA	LIGHT ALMOND	FRAME, 3 PORT ISF

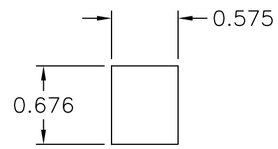

KEYSTONE OPENING
(3) PLACES

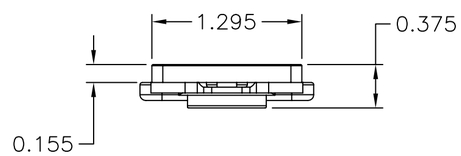

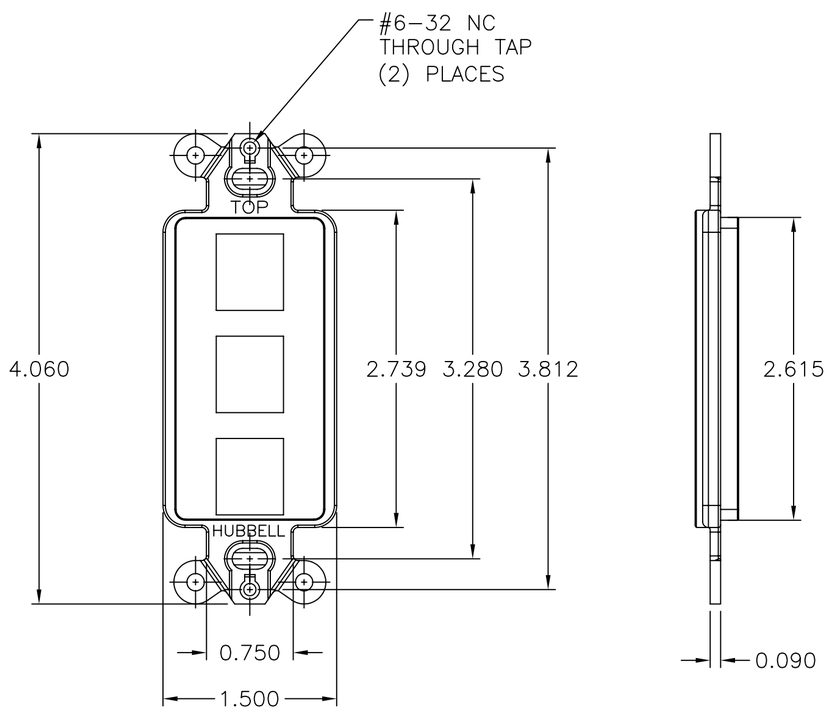

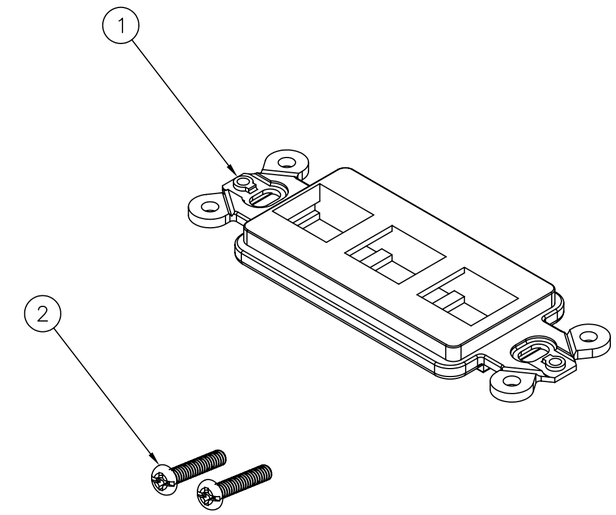

NOTES
UNLESS OTHERWISE SPECIFIED:

1. UL LISTED:
2. STANDARD NEMA RECTANGULAR OPENING (WD60S2)
3. SPECIFICATIONS SUBJECT TO CHANGE WITHOUT NOTICE

REV.	ECN	DATE	DESCRIPTION	CHG BY	APPD BY
C	5870	6/9/06	ADDED LIGHT ALMOND CATALOG NUMBER	CD	
B	5678	8/11/05	ADDED ALMOND CATALOG NUMBER	CD	
A	4630	02/13/02	INITIAL RELEASE	PSM	

Created on AUTOCAD

DIMENSIONING AND TOLERANCE PER ANSI Y14.5M-1982
UNLESS OTHERWISE SPECIFIED, DIMENSIONS ARE IN INCHES (MM).
TOLERANCES
.XX = ±.01 (.25)
.XXX = ±.005 (.127)
.XXXX = ±.0025 (.0635)
ANGLE TOL ±1°

IN ACCEPTING OUR DRAWINGS, BLUEPRINTS, OR SUPPORTING DOCUMENTATION FOR QUOTATION OR OTHER PURPOSES, YOU AGREE NOT TO DISCLOSE TO OTHERS THE IDEAS, INFORMATION, OR DESIGNS SHOWN HEREIN, AND THAT YOU WILL MAKE NO USE OF SAME WITHOUT PERMISSION

PROJECT REFERENCE:

MATERIAL:

DRAWN BY: PAUL S. MAGUIRE 02/13/02

CHECKED BY:

APPROVED BY:

Hubbell Premise Wiring
HUBBELL INCORPORATED (Delaware)
14 Lord's Hill Road, Stonington, Connecticut 06378

TITLE: FRAME, 3 PORT ISF

SIZE: C | DRAWING NO. C778179 | REV. C

SCALE: 1/1 | SHEET 1 OF 1