CATALOG NUMBER	COLOR	DESCRIPTION
IM2K1W	WHITE	MODULE,STRAIGHT 1U 1 PORT
IM2K1OW	OFFICE WHITE	MODULE,STRAIGHT 1U 1 PORT
IM2K1EI	ELECTRIC IVORY	MODULE,STRAIGHT 1U 1 PORT
IM2K1GY	GRAY	MODULE,STRAIGHT 1U 1 PORT
IM2K1BK	BLACK	MODULE,STRAIGHT 1U 1 PORT
IM2K1TI	TELCO IVORY	MODULE,STRAIGHT 1U 1 PORT
IM2K1AL	ALMOND	MODULE,STRAIGHT 1U 1 PORT

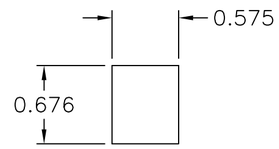

KEYSTONE OPENING

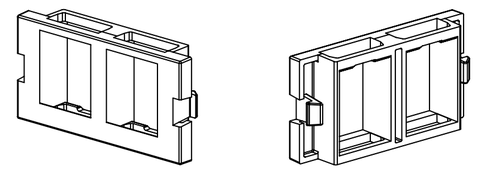

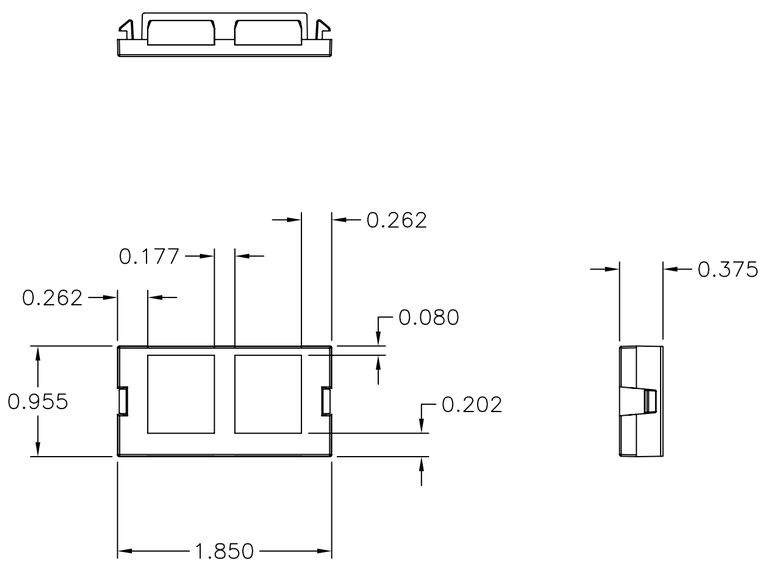

NOTES
UNLESS OTHERWISE SPECIFIED:

1. C–UL–US LISTED: E129878
2. SPECIFICATIONS SUBJECT TO CHANGE WITHOUT NOTICE

REV.	ECN	DATE	DESCRIPTION	CHG BY	APPD BY
B	5680	8/22/05	ADDED –AL CATALOG NUMBER	CD	
A	4148	02/23/01	INITIAL RELEASE	PSM	HKM

Created on AUTOCAD

DIMENSIONING AND TOLERANCE PER ANSI Y14.5M–1982
UNLESS OTHERWISE SPECIFIED, DIMENSIONS ARE IN INCHES (MM).
TOLERANCES
.XX = ±.01 (.25)
.XXX = ±.005 (.127)
.XXXX = ±.0025 (.0635)
ANGLE TOL ±1°

IN ACCEPTING OUR DRAWINGS, BLUEPRINTS, OR SUPPORTING DOCUMENTATION FOR QUOTATION OR OTHER PURPOSES, YOU AGREE NOT TO DISCLOSE TO OTHERS THE IDEAS, INFORMATION, OR DESIGNS SHOWN HEREIN, AND THAT YOU WILL MAKE NO USE OF SAME WITHOUT PERMISSION

PROJECT REFERENCE:

MATERIAL:

DRAWN BY: P.S.MAGUIRE 02/23/2001

CHECKED BY: H. McGREGOR 02/28/2001

APPROVED BY: H. McGREGOR 02/28/2001

Hubbell Premise Wiring
HUBBELL INCORPORATED (Delaware)
14 Lord's Hill Road, Stonington, Connecticut 06378

TITLE: INFINE STATION MODULE
2-PORT, STRAIGHT
1U

SIZE: C
DRAWING NO. C778786
REV. B
SCALE: FULL
SHEET 1 OF 1