ITEM NO.	DESCRIPTION	QTY.
1	15-PIN TO 8-PIN ANGLED CONNECTOR	10
2	HEX STAND OFF SCREWS (NOT SHOWN)	20

CATALOG NUMBER	DESCRIPTION
15A6P10	VGA 15-PIN TO 8-PIN ANGLED CONNECTOR, 10 PACK
15A6P1	VGA 15-PIN TO 8-PIN ANGLED CONNECTOR

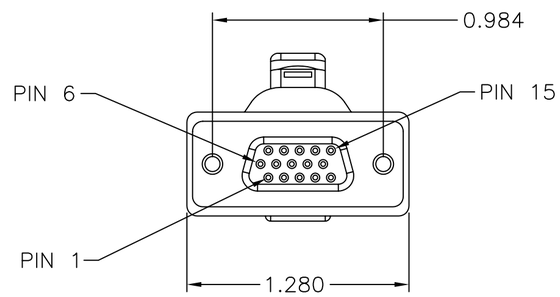

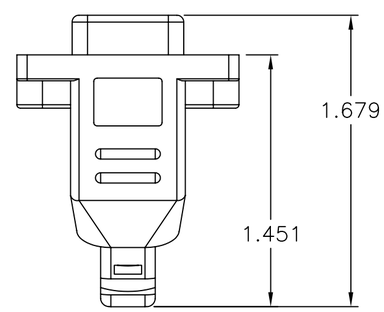

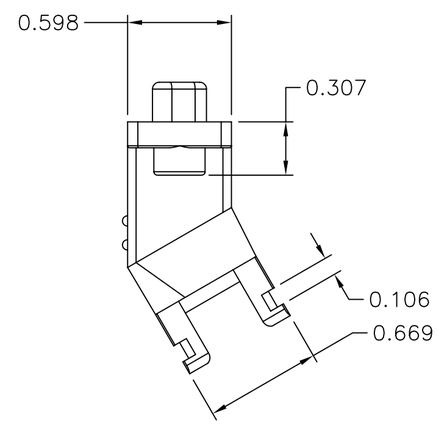

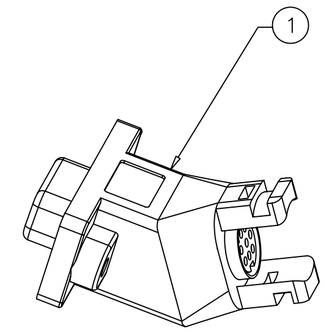

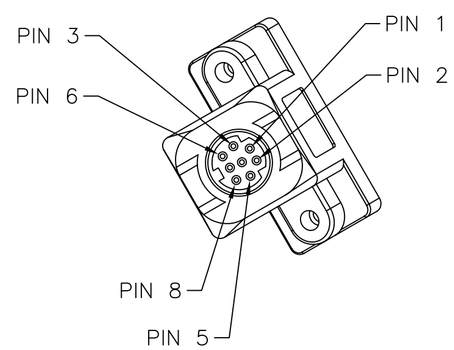

PIN OUT DETAIL

15-PIN FEMALE	8-PIN FEMALE
1	6
2	7
3	8
6	2
7	
8	
13	3
14	5
12	1
15	4
5	SHELL
10	
SHELL	

NOTES:

1. CONTACTS: GOLD PLATED 2u".
2. 15-PIN CONNECTOR SIDE MOUNTS TO AN INFINeSTATION MODULE PLATE USING TWO HEX SCREWS (NOT SHOWN).
3. MOLDED IN SLOTS ON 8-PIN SIDE TO ACCOMMODATE A WIRE-TIE FOR ADDED STRAIN RELIEF, IF DESIRED.
4. FOR USE WITH VIDEO DISTRIBUTION DEVICES SUCH AS PROJECTORS, CAMERAS, AND COMPUTERS.
5. CONNECTOR AND MOUNTING HARDWARE SOLD IN SINGLE PACKS OR IN PACKAGES OF 10.
6. SPECIFICATIONS SUBJECT TO CHANGE WITHOUT PRIOR NOTIFICATION.

REV.	ECN	DATE	DESCRIPTION	CHG BY	APPD BY
B	6130	6/19/07	ADDED 15A6P1 CATALOG NUMBER	CD	

Created on AUTOCAD

DIMENSIONING AND TOLERANCE PER ANSI Y14.5M-1982 UNLESS OTHERWISE SPECIFIED, DIMENSIONS ARE IN INCHES (MM). TOLERANCES .XX = ±.01 (.25) .XXX = ±.005 (.127) .XXXX = ±.0025 (.0635) ANGLE TOL ±1°

IN ACCEPTING OUR DRAWINGS, BLUEPRINTS, OR SUPPORTING DOCUMENTATION FOR QUOTATION OR OTHER PURPOSES, YOU AGREE NOT TO DISCLOSE TO OTHERS THE IDEAS, INFORMATION, OR DESIGNS SHOWN HEREIN, AND THAT YOU WILL MAKE NO USE OF SAME WITHOUT PERMISSION

PROJECT REFERENCE: 2005-020

MATERIAL: SEE NOTES

DRAWN BY: C. DUSSAULT 10/4/06

CHECKED BY:

APPROVED BY:

Hubbell Premise Wiring
HUBBELL INCORPORATED (Delaware)
14 Lord's Hill Road, Stonington, Connecticut 06378

TITLE: VGA CONNECTOR 15-PIN FEMALE TO 8-PIN FEMALE ANGLED CONNECTOR

SIZE: C | DRAWING NO. HWS12458C | REV. B

SCALE: N/A | SHEET 1 OF 1