Pentair
Technical Products

Hoffman®

ACCESSPLUS® II

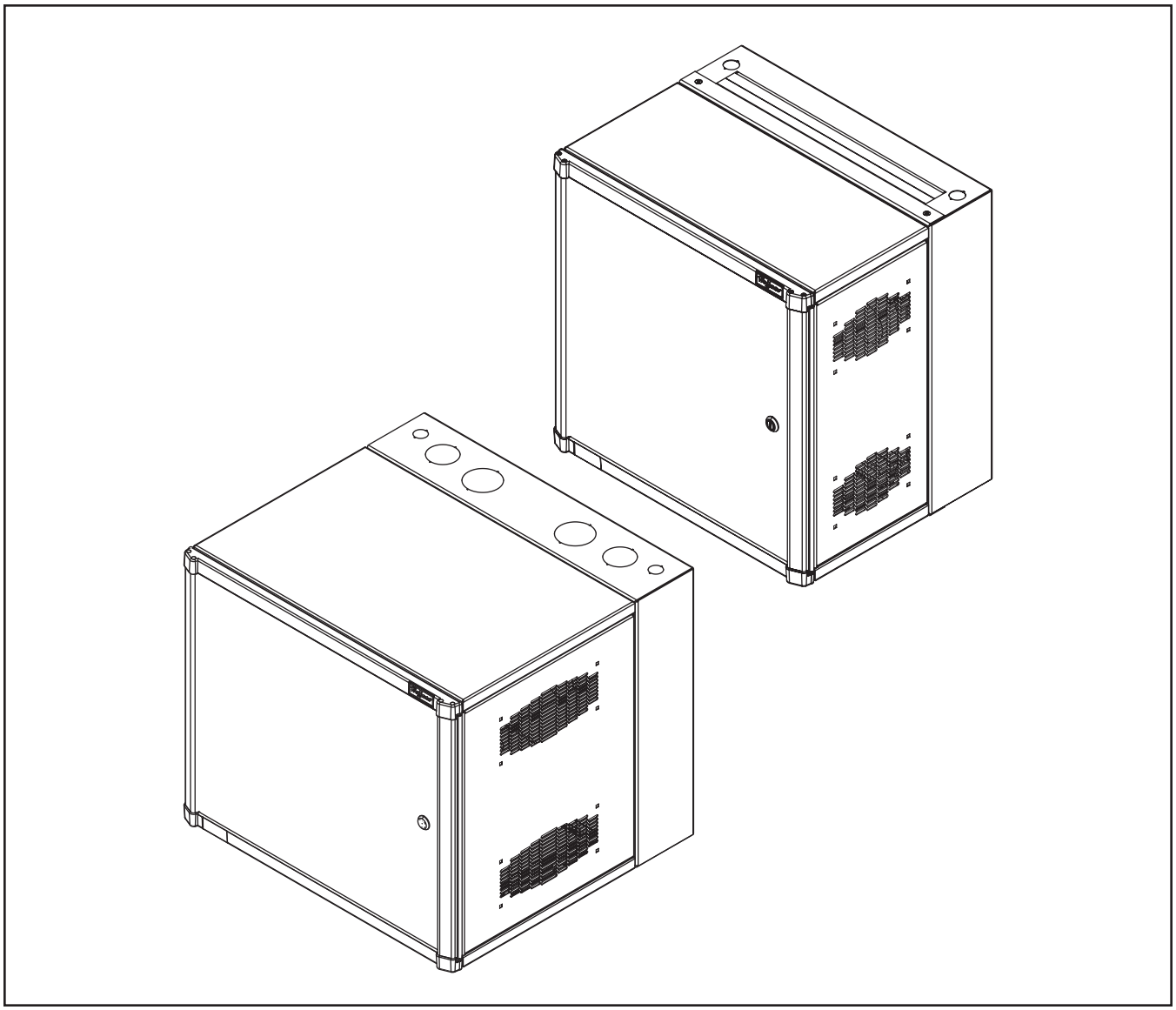

© 2010 Pentair Technical Products

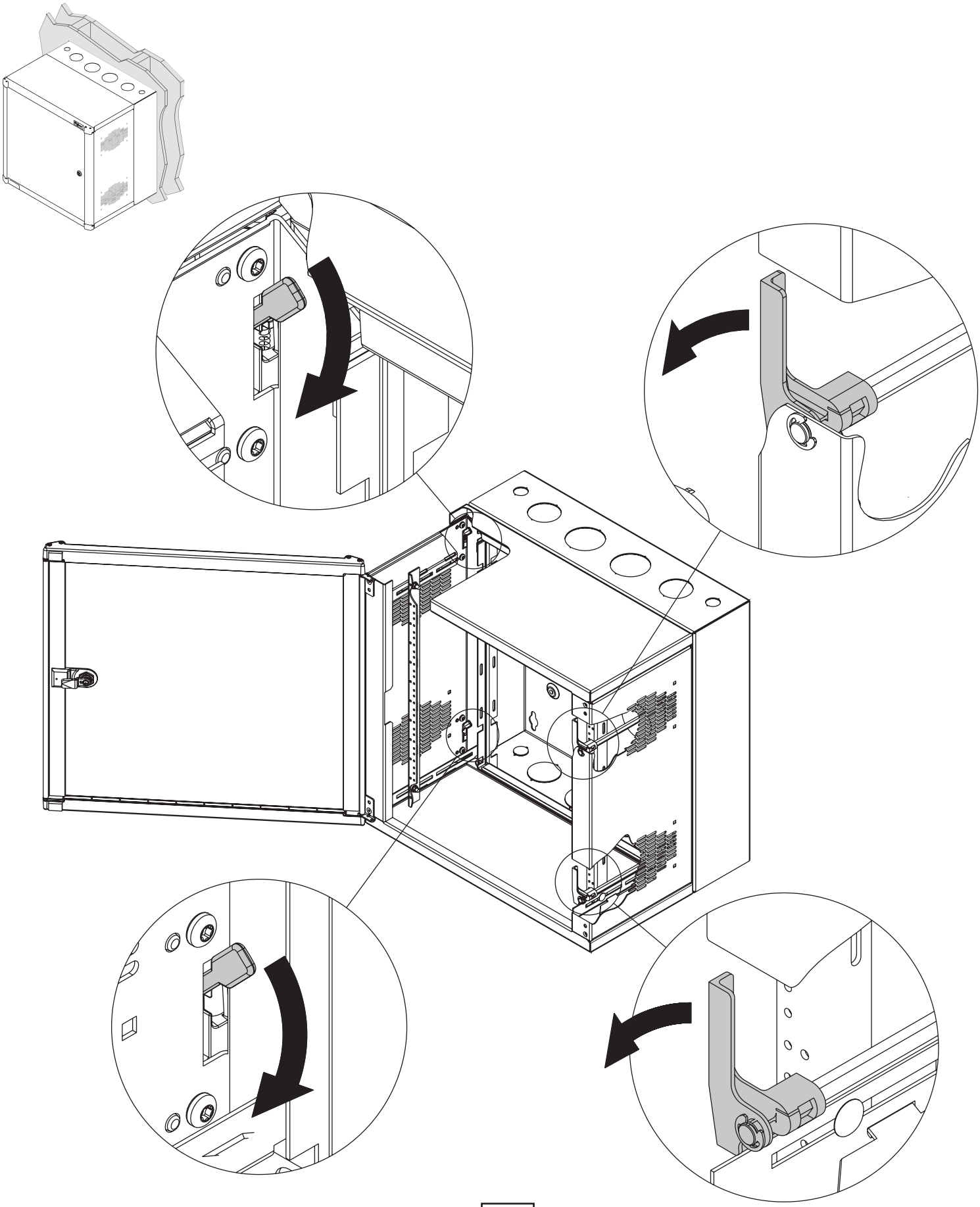

1

© 2010 Pentair Technical Products

1 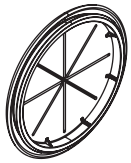 (3X)	2 10-32X5/8 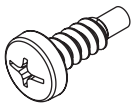 (20X)
3 3/8” (10mm) 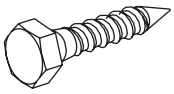 (0X)	4 3/8” (10mm) (0X)

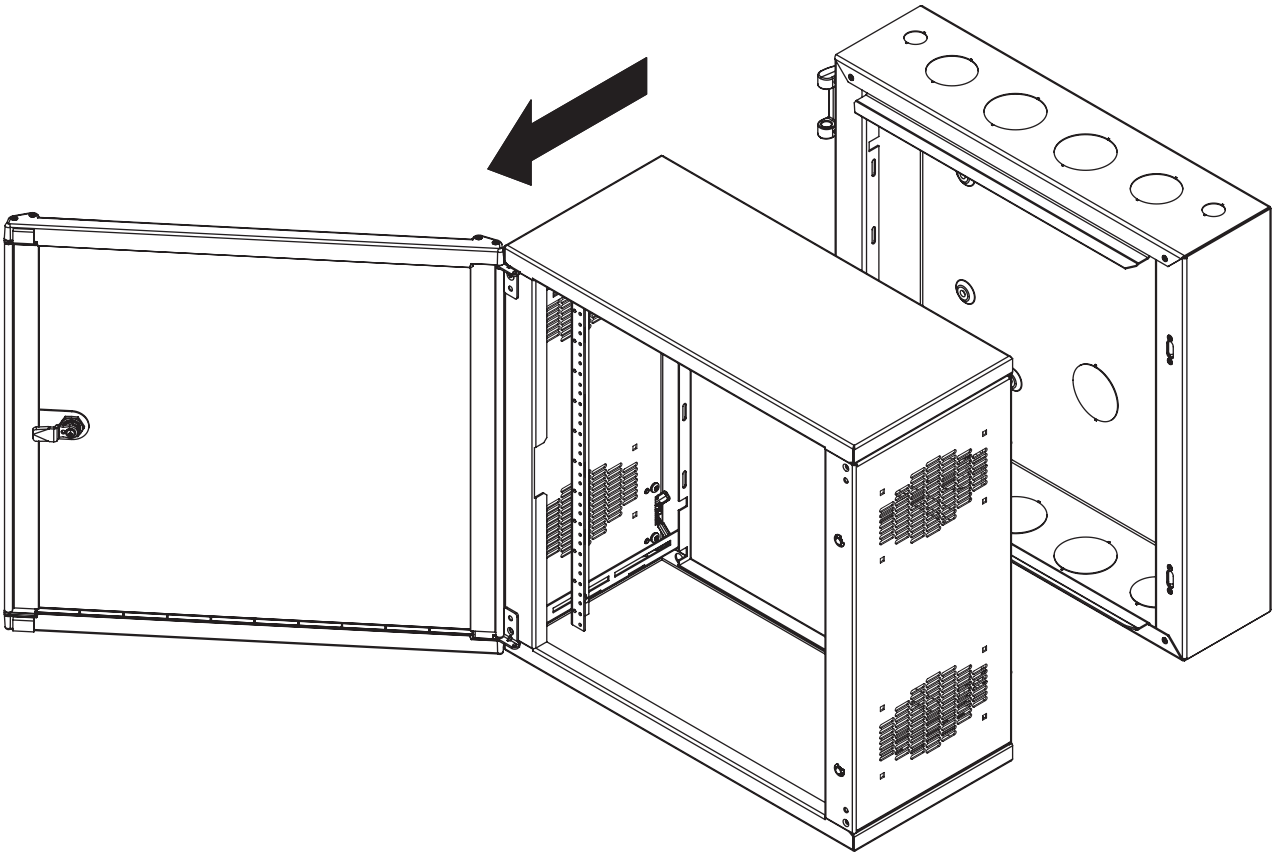

2

© 2010 Pentair Technical Products

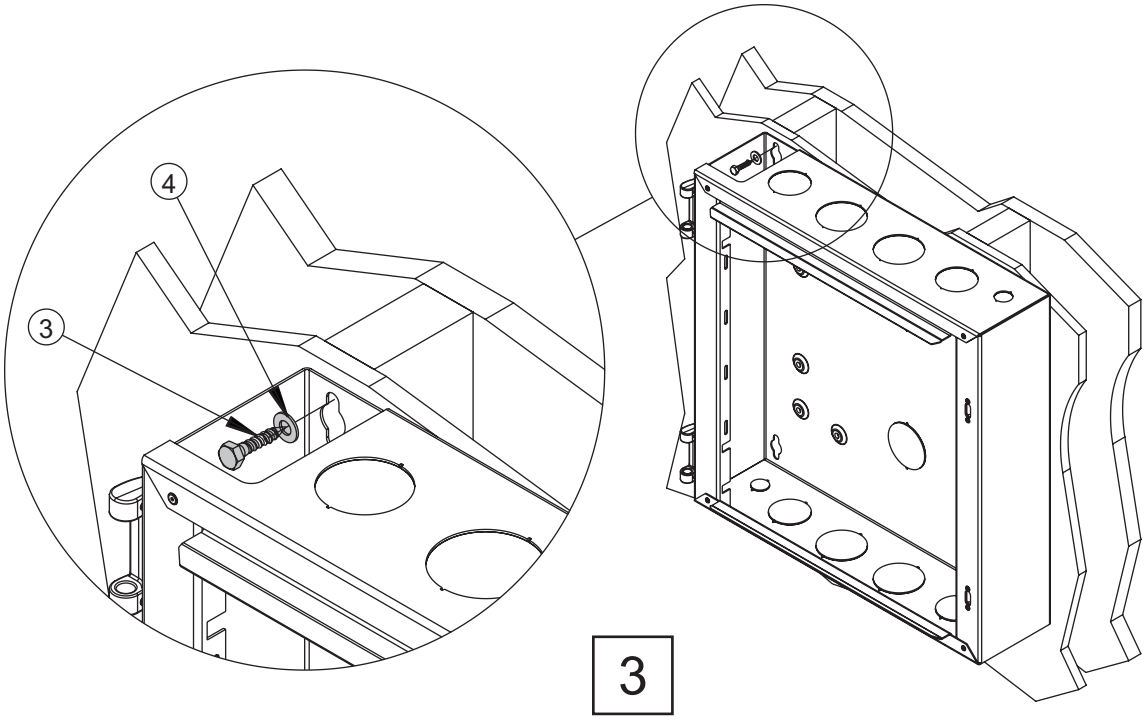

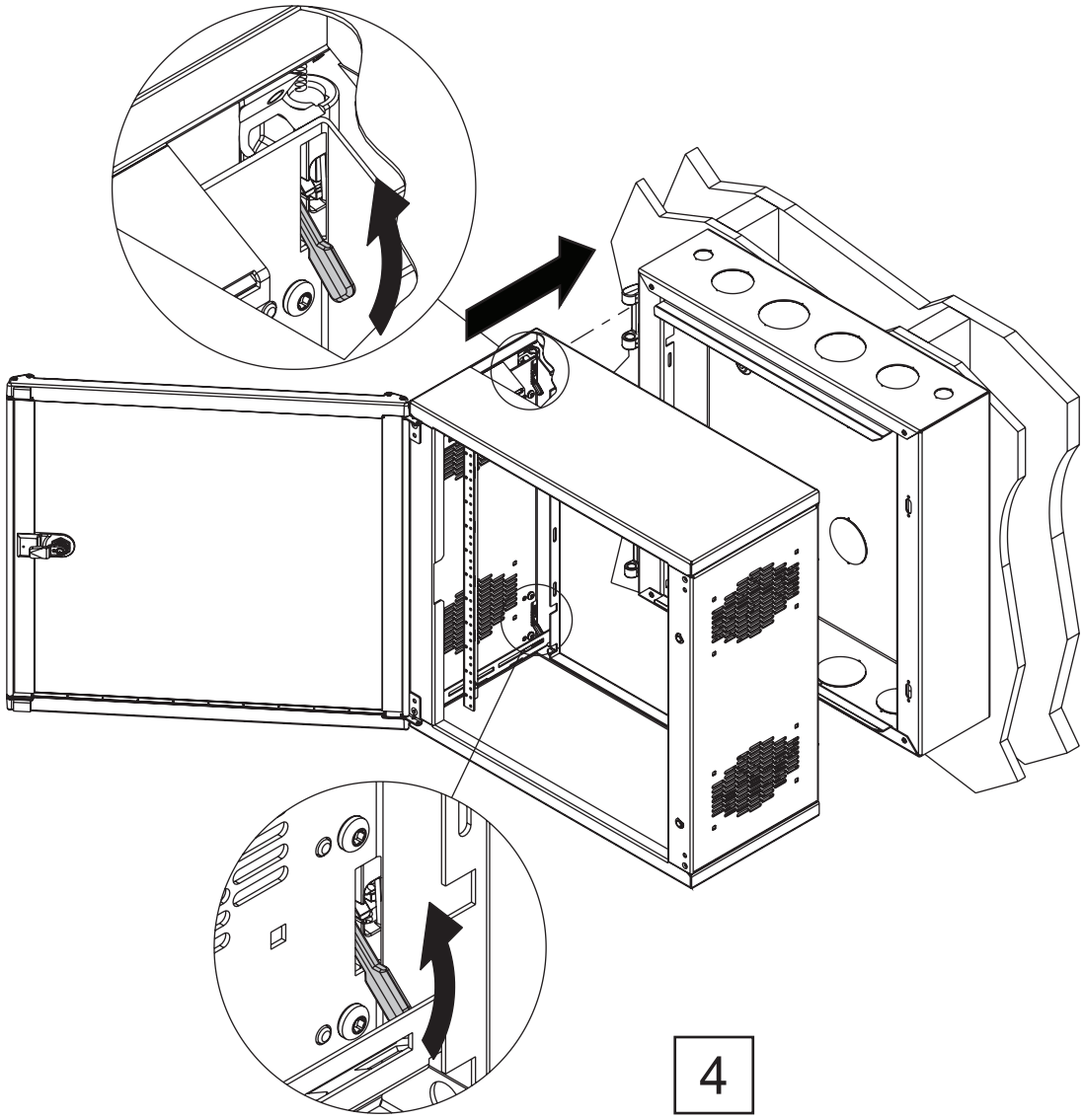

© 2010 Pentair Technical Products

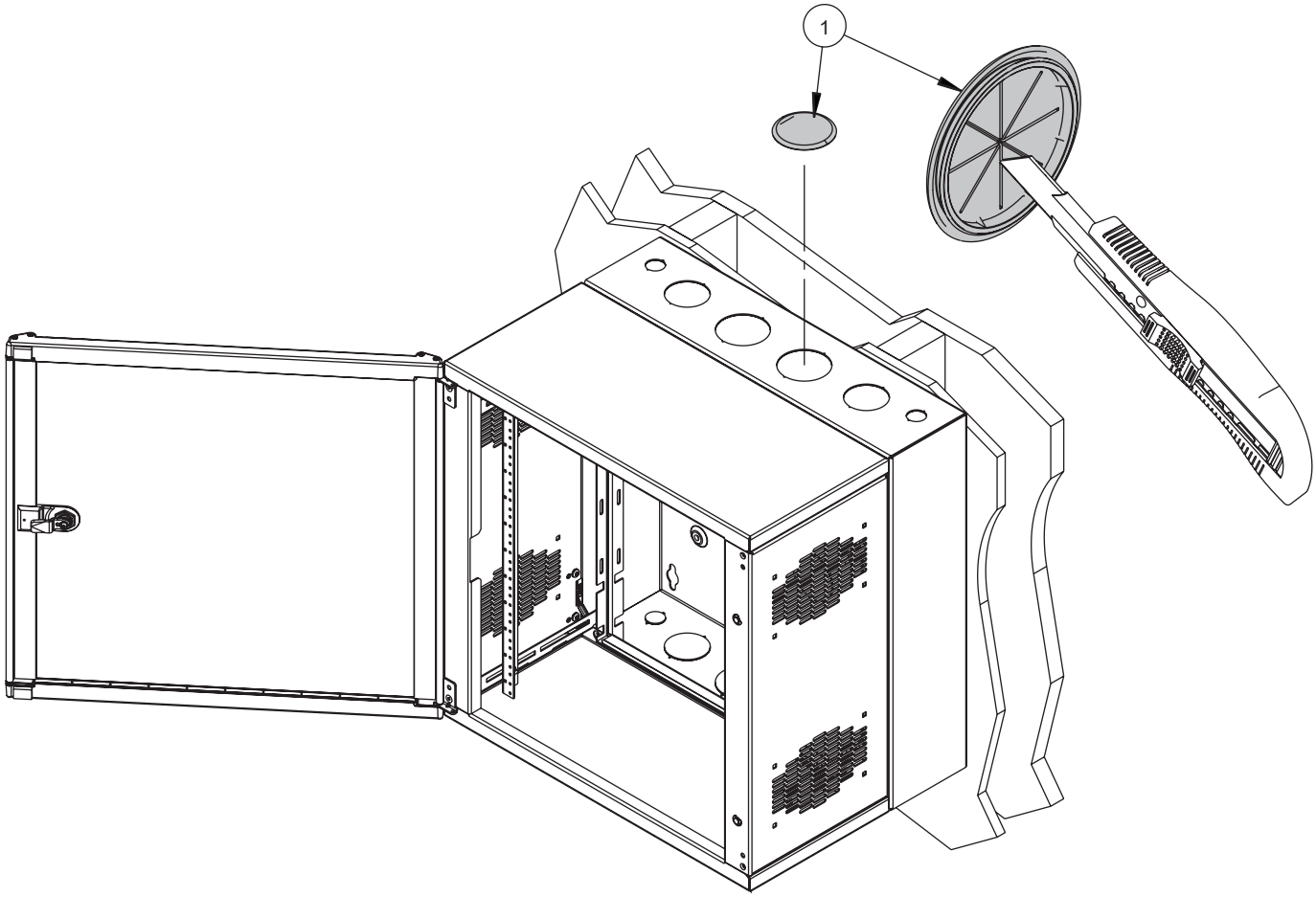

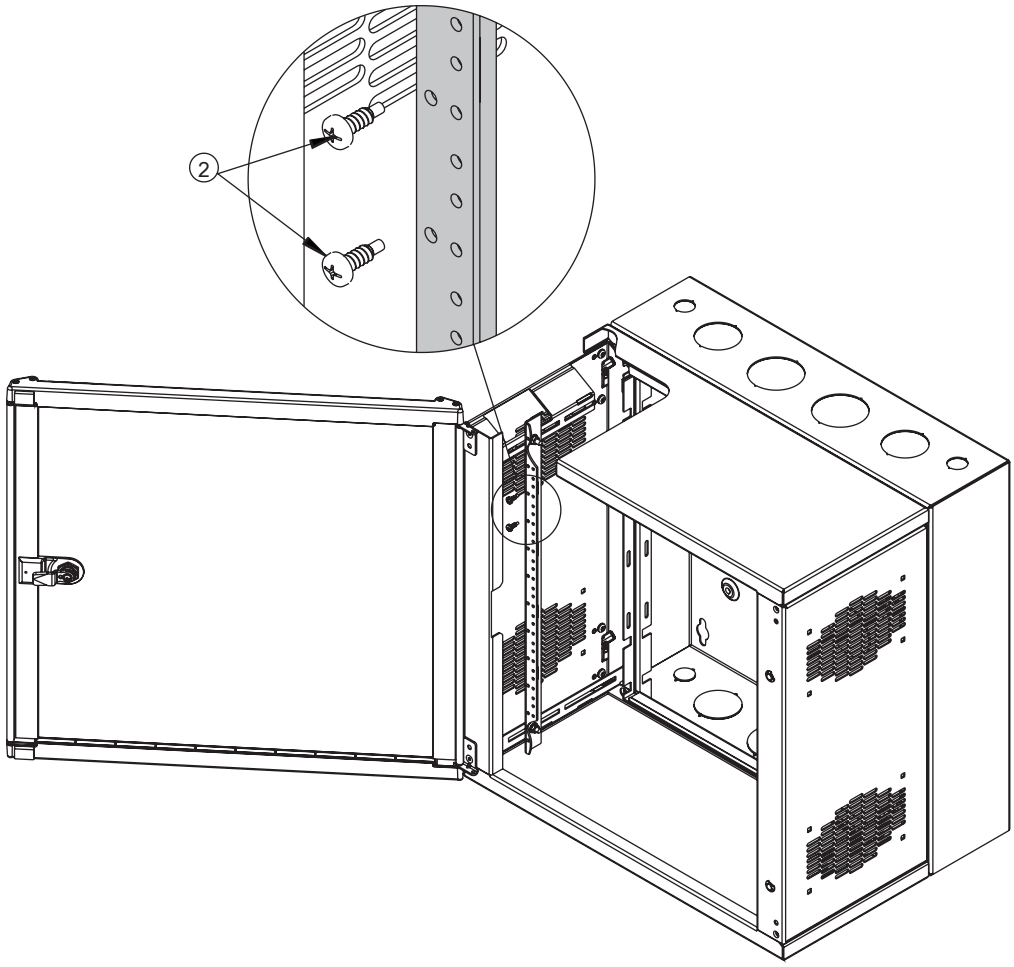

© 2010 Pentair Technical Products

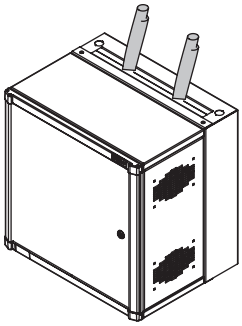

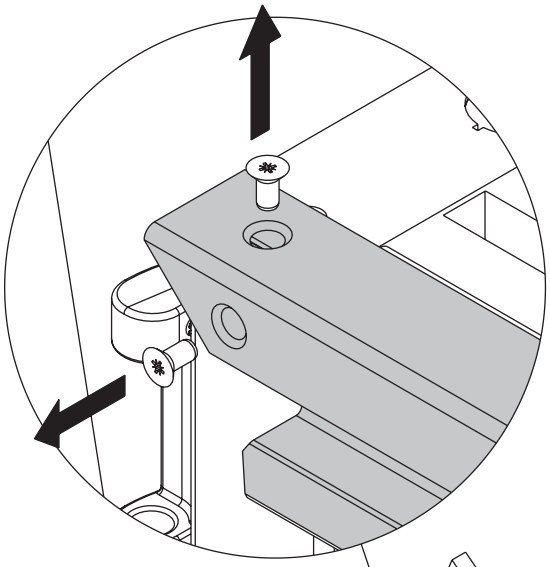

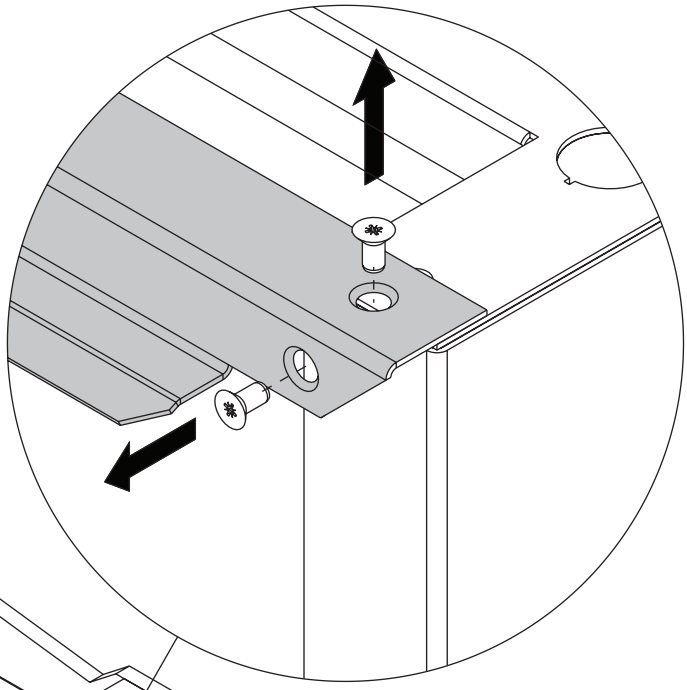

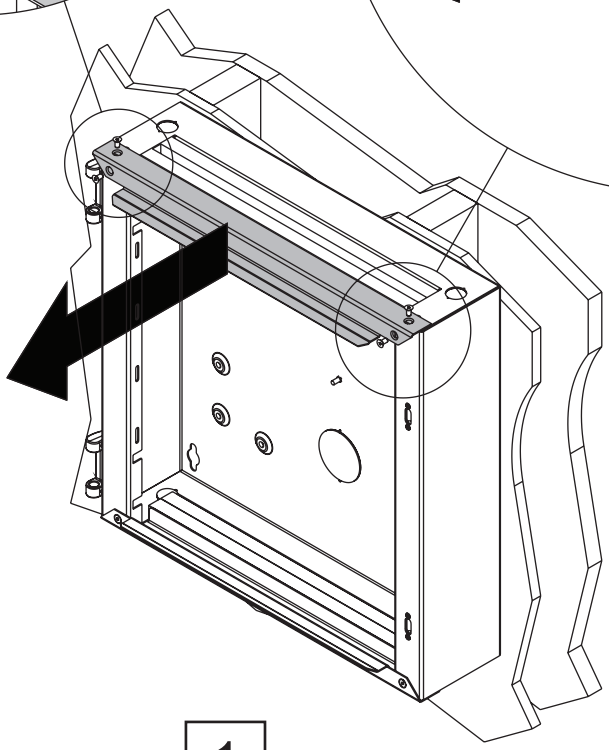

1

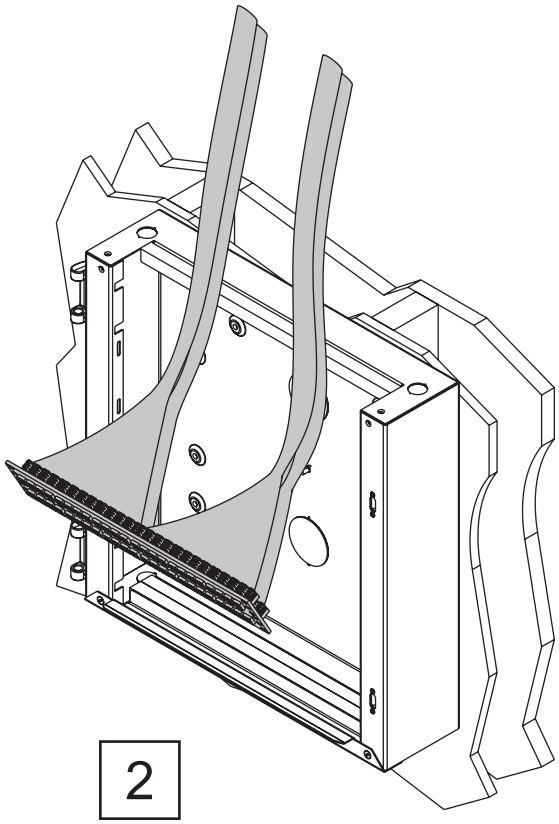

2

© 2010 Pentair Technical Products

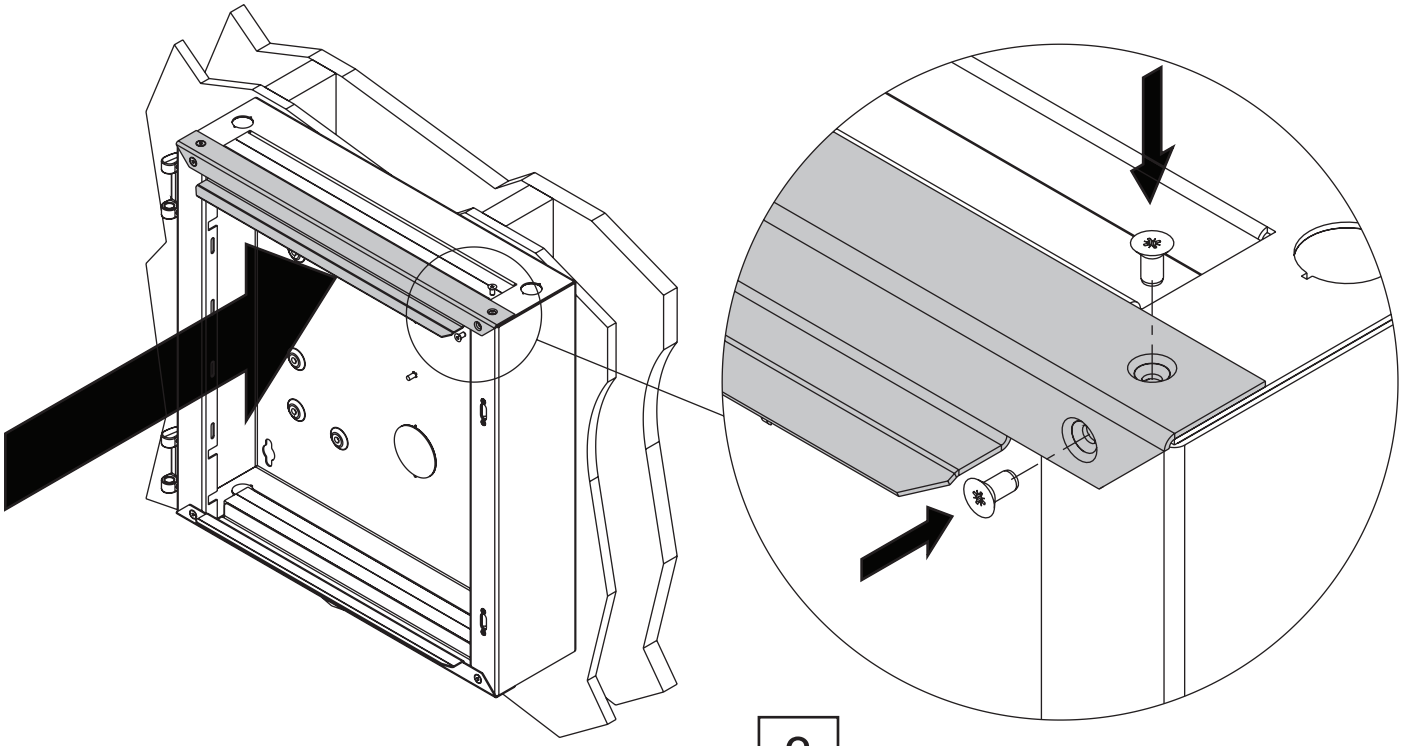

3

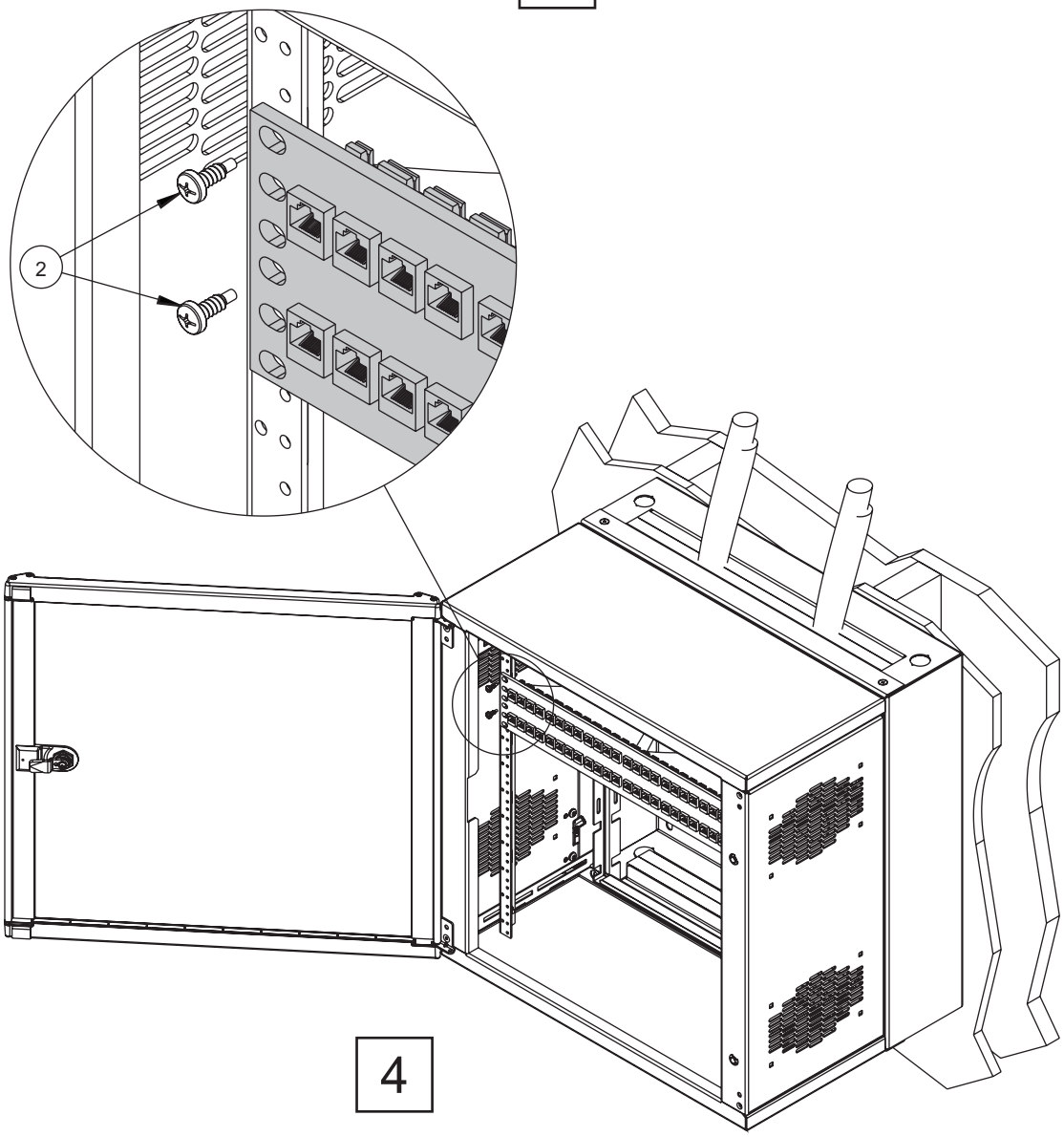

4

© 2010 Pentair Technical Products

Catalog Number Référence Catalogue Número De Catálogo			Enclosure Size Taille De Clôture Tamaño Del Recinto	H	W
EWMW242418	EWMS242418	EWMWG242418	24 X 24 X 18	20.87 (530)	21.65 (550)
EWMW362418	EWMS362418	EWMWG362418	36 X 24 X 18	32.27 (845)	21.65 (550)
EWMW482418	EWMS482418	EWMWG482418	48 X 24 X 18	45.28 (1150)	21.65 (550)
EWMW602418	----	----	60 X 24 X 18	57.29 (1455)	21.65 (550)
EWMW722418	----	----	72 X 24 X 18	69.30 (1760)	21.65 (550)
EWMW242425	EWMS242425	EWMWG242425	24 X 24 X 25	20.87 (530)	21.65 (550)
EWMW362425	EWMS362425	EWMWG362425	36 X 24 X 25	32.27 (845)	21.65 (550)
EWMW482425	EWMS482425	EWMWG482425	48 X 24 X 25	45.28 (1150)	21.65 (550)
EWMW602425	----	----	60 X 24 X 25	57.29 (1455)	21.65 (550)
EWMW722425	----	----	72 X 24 X 25	69.30 (1760)	21.65 (550)
EWMW242430	----	----	24 X 24 X 30	20.87 (530)	21.65 (550)
EWMW362430	----	----	36 X 24 X 30	32.27 (845)	21.65 (550)
EWMW482430	----	----	48 X 24 X 30	45.28 (1150)	21.65 (550)
EWMW242825	----	----	24 X 28 X 25	20.87 (530)	25.29 (650)
EWMW362825	----	----	36 X 28 X 25	32.27 (845)	25.29 (650)
EWMW482825	----	----	48 X 28 X 25	45.28 (1150)	25.29 (650)

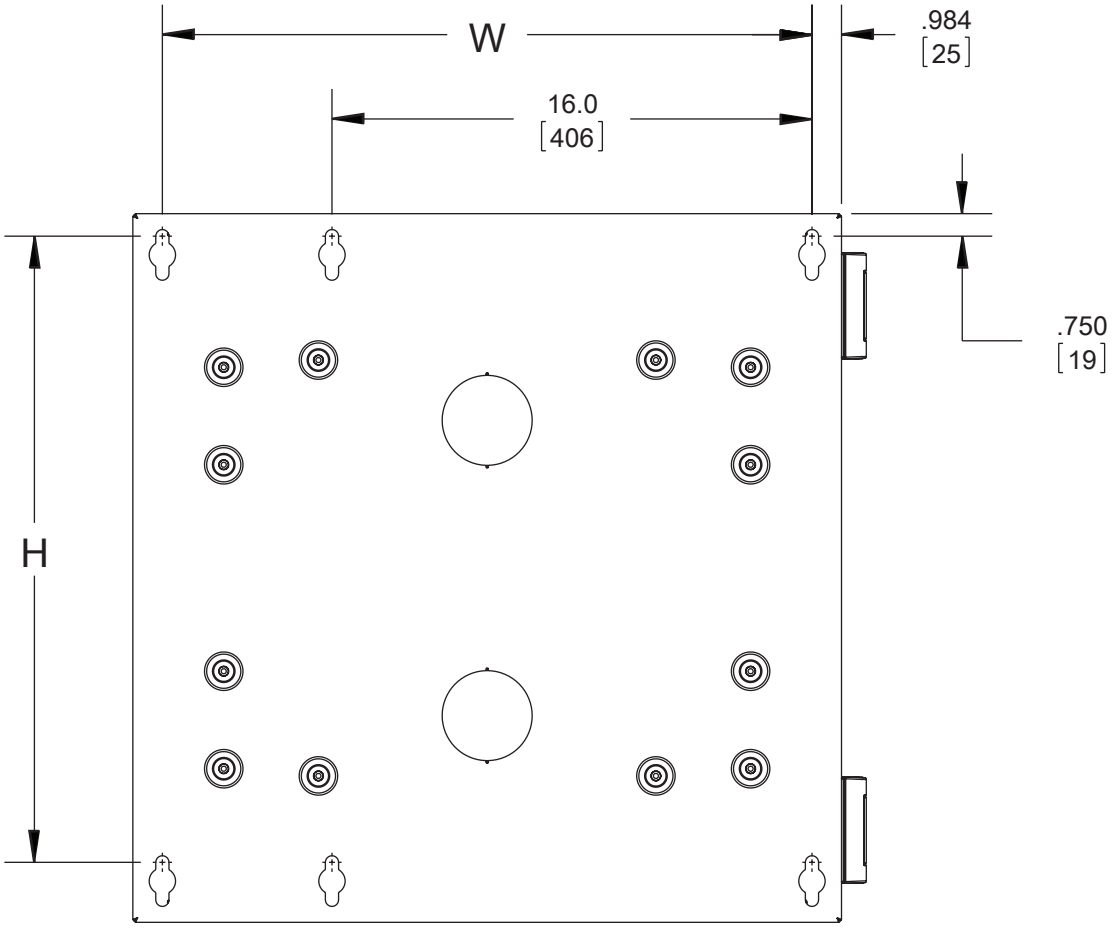

© 2010 Pentair Technical Products

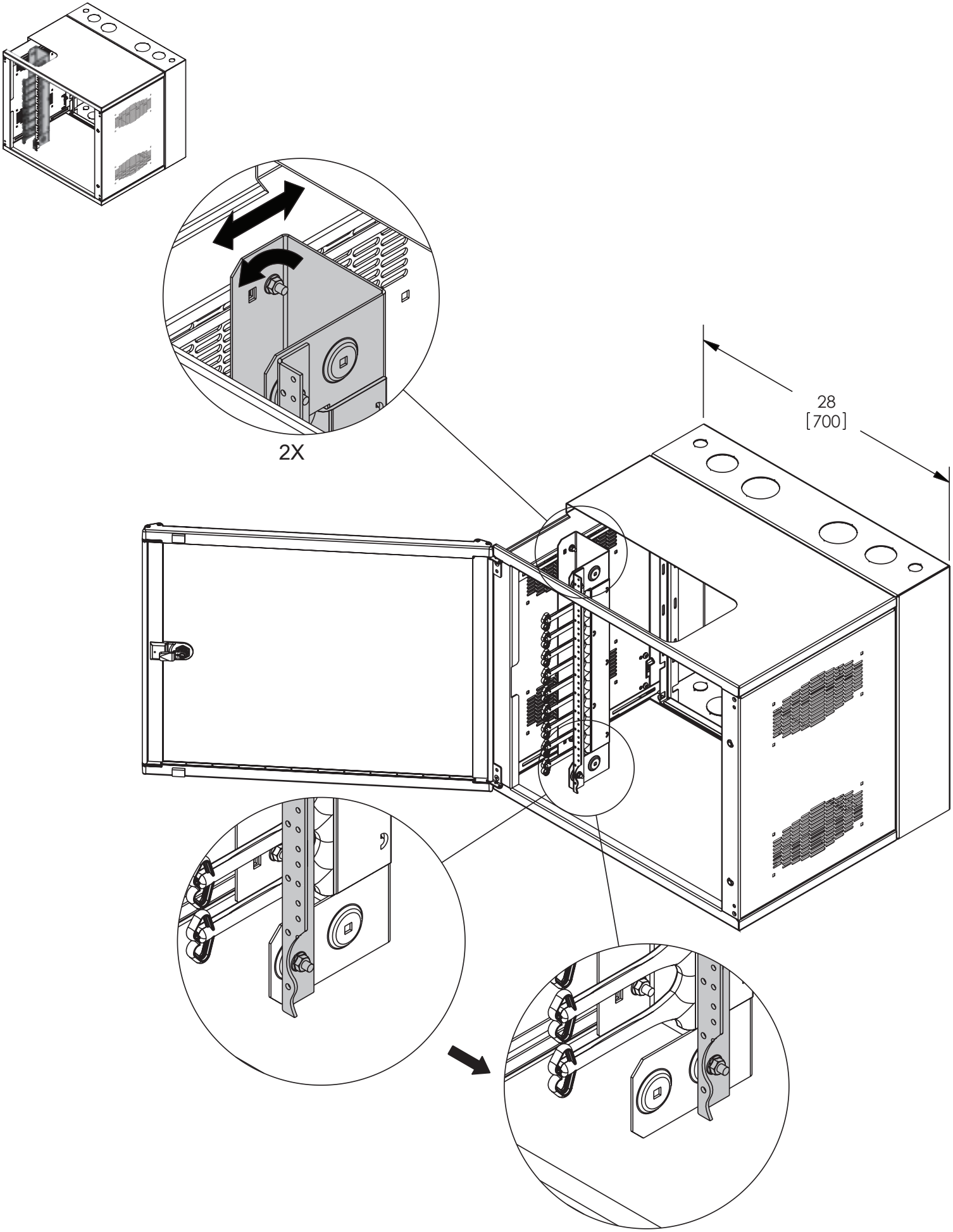

© 2010 Pentair Technical Products

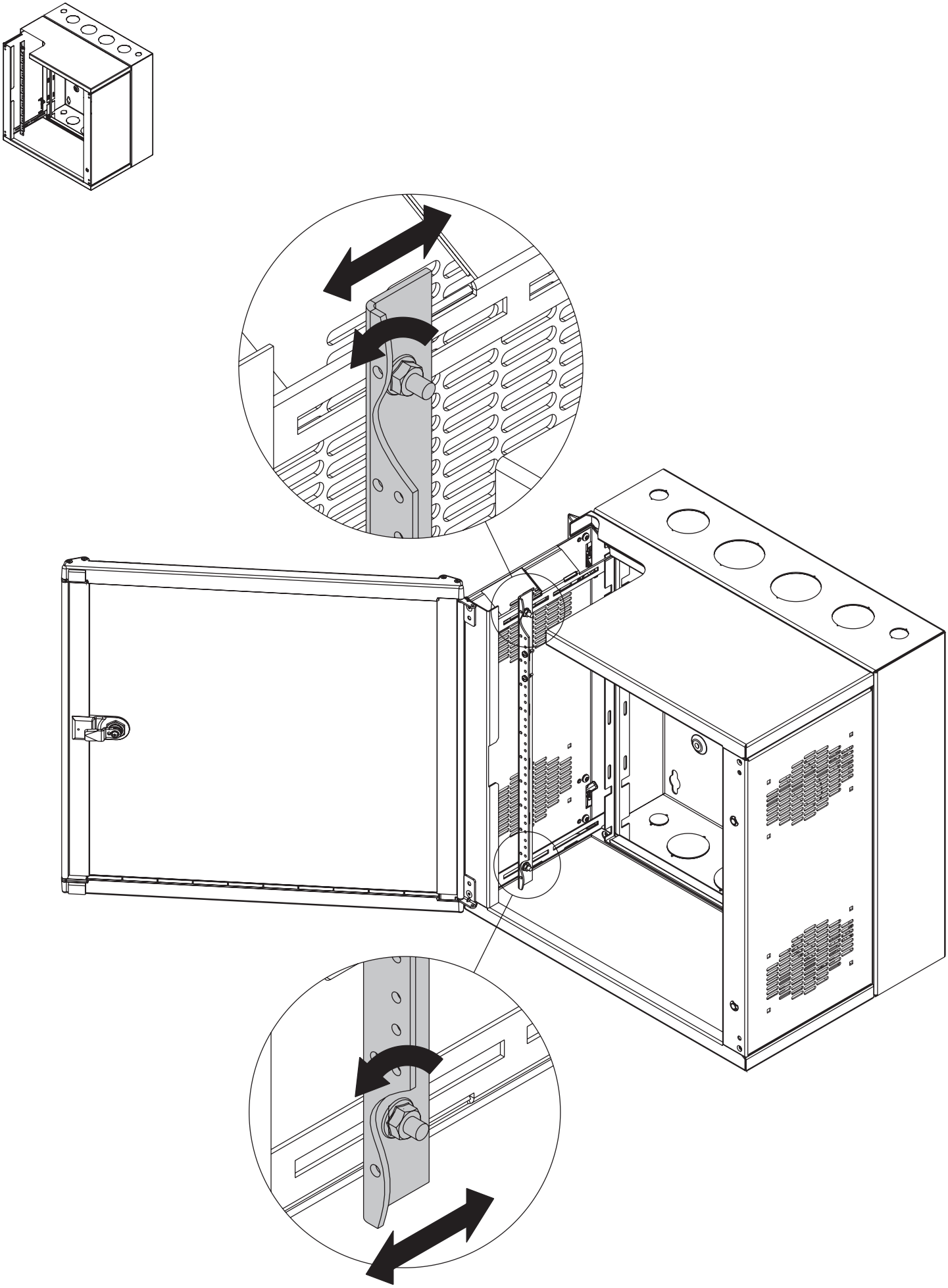

© 2010 Pentair Technical Products

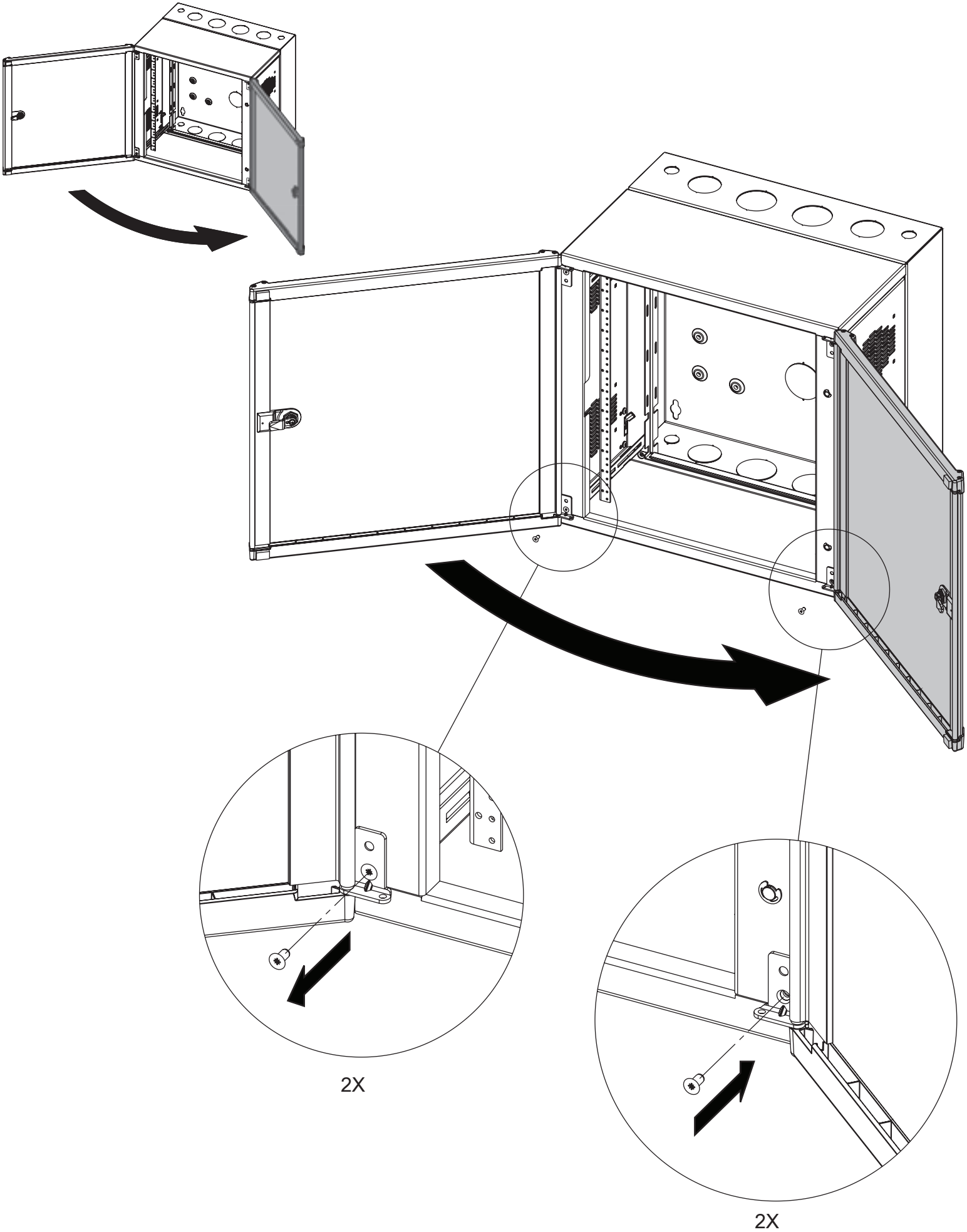

© 2010 Pentair Technical Products

© 2010 Pentair Technical Products