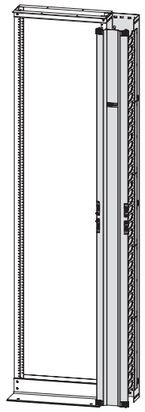

**HOFFMAN (World Headquarters)**
2100 Hoffman Way
Anoka, MN 55303-1745 USA
(763) 421-2240 Fax: (763) 422-2178
Customer Service: (763) 422-2211
www.hoffmanonline.com

**Canada**
**HOFFMAN**
111 Grangeway Avenue
Suite 504
Scarborough, Ontario M1H 3E9
(416) 289-2770 Fax: (416) 289-2883
1-800-668-2500 (Canada only)

**Mexico**
**HOFFMAN MEXICO, S de RL de CV**
Arquímedes No. 33
Piso 1
Col. Palmas Polanco
México, DF
CP 11560
P: (55) 5280-1596
F: (55) 5280-8827 / 5280-8167

A Pentair Company

# CABLETEK™

## Vertical Manager
## Manager verticale
## Manager vertical

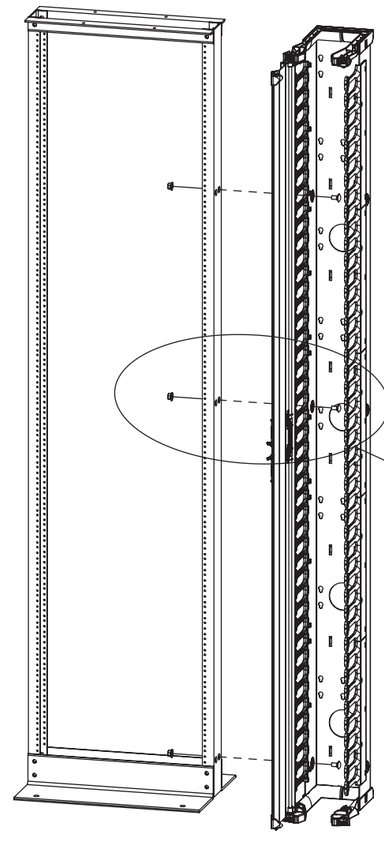

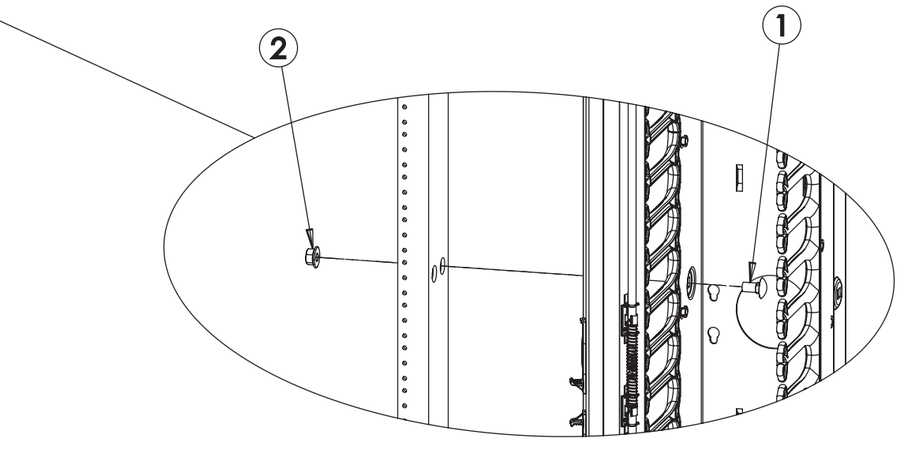


| 1 | 2 |
|---|---|
| 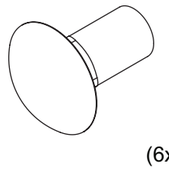 (6x) | 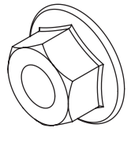 (6x) |


© 2007 Hoffman Enclosures Inc.