Panels for Enclosures

Perforated Panels

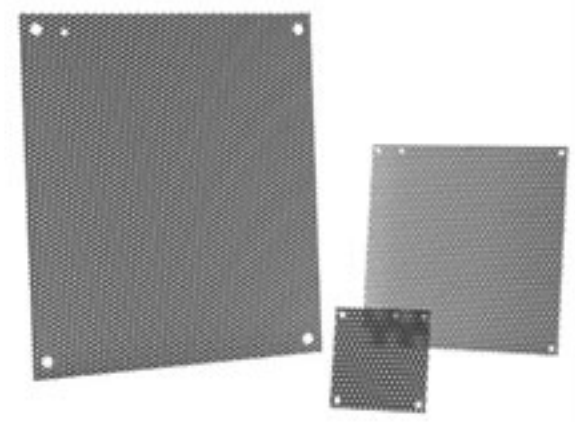

Perforated panels are 16 gauge steel and accept self-tapping screws and eliminate the need to measure, mark and drill when mounting components. Use for mounting lightweight control components.

Bulletin: PNLP

Catalog Number	Use in	Panel Size D x E (in.)	Panel Size D x E (mm)
A6N6PP	Small Type 1 Panel Enclosures and Small Type 3R Boxes	4.25 x 4.25	108 x 108
A8N6PP	Small Type 1 Panel Enclosures and Small Type 3R Boxes	6.25 x 4.25	159 x 108
A8N8PP	Small Type 1 Panel Enclosures and Small Type 3R Boxes	6.25 x 6.25	159 x 159
A10N8PP	Small Type 1 Panel Enclosures and Small Type 3R Boxes	8.25 x 6.25	210 x 159
A10N10PP	Small Type 1 Panel Enclosures and Small Type 3R Boxes	8.25 x 8.25	210 x 210
A12N10PP	Small Type 1 Panel Enclosures and Small Type 3R Boxes	10.25 x 8.25	260 x 210
A12N12PP	Small Type 1 Panel Enclosures and Small Type 3R Boxes	10.25 x 10.25	260 x 260
A14N12PP	Small Type 1 Panel Enclosures and Small Type 3R Boxes	12.25 x 10.25	311 x 260
A16N12PP	Small Type 1 Panel Enclosures and Small Type 3R Boxes	14.25 x 10.25	362 x 260
A20N12PP	Small Type 1 Panel Enclosures and Small Type 3R Boxes	18.25 x 10.25	464 x 260
A16N12MPP	Medium Type 1 Panel Enclosures	10.50 x 13.00	267 x 330
A16N16MPP	Medium Type 1 Panel Enclosures	14.50 x 13.00	368 x 330
A16N20MPP	Medium Type 1 Panel Enclosures	18.50 x 13.00	470 x 330
A18N18MPP	Medium Type 1 Panel Enclosures	16.50 x 15.00	419 x 381
A20N12MPP	Medium Type 1 Panel Enclosures	10.50 x 17.00	267 x 432
A20N16MPP	Medium Type 1 Panel Enclosures	14.50 x 17.00	368 x 432
A20N20MPP	Medium Type 1 Panel Enclosures	18.50 x 17.00	470 x 432
A24N16MPP	Medium Type 1 Panel Enclosures	14.50 x 21.00	368 x 533
A24N20MPP	Medium Type 1 Panel Enclosures	18.50 x 21.00	470 x 533
A24N24MPP	Medium Type 1 Panel Enclosures	22.50 x 21.00	572 x 533
A30N20MPP	Medium Type 1 Panel Enclosures	18.50 x 26.00	470 x 660
A30N24MPP	Medium Type 1 Panel Enclosures	22.50 x 26.00	572 x 660
A30N30MPP	Medium Type 1 Panel Enclosures	28.50 x 26.00	724 x 660
A36N24MPP	Medium Type 1 Panel Enclosures	22.50 x 32.00	572 x 813
A36N30MPP	Medium Type 1 Panel Enclosures	26.50 x 32.00	724 x 813
A16P12PP	Medium Type 3R Hinged-Cover Panel Enclosures	13.00 x 9.00	330 x 229
A16P16PP	Medium Type 3R Hinged-Cover Panel Enclosures	13.00 x 13.00	330 x 330
A20P16PP	Medium Type 3R Hinged-Cover Panel Enclosures	17.00 x 13.00	432 x 330
A18P18PP	Medium Type 3R Hinged-Cover Panel Enclosures	15.00 x 15.00	381 x 381
A20P20PP	Medium Type 3R Hinged-Cover Panel Enclosures	17.00 x 17.00	432 x 732
A24P20PP	Medium Type 3R Hinged-Cover Panel Enclosures	21.00 x 17.00	533 x 432
A24P24PP	Medium Type 3R Hinged-Cover Panel Enclosures	21.00 x 21.00	533 x 533
A30P24PP	Medium Type 3R Hinged-Cover Panel Enclosures	27.00 x 21.00	686 x 533
A36P24PP	Medium Type 3R Hinged-Cover Panel Enclosures	33.00 x 21.00	838 x 533
A30P30PP	Medium Type 3R Hinged-Cover Panel Enclosures	27.00 x 27.00	686 x 686
A36P30PP	Medium Type 3R Hinged-Cover Panel Enclosures	33.00 x 27.00	838 x 686
A36P36PP	Medium Type 3R Hinged-Cover Panel Enclosures	33.00 x 33.00	838 x 838

 © 2009-2011 Pentair Technical Products

Panels for Enclosures

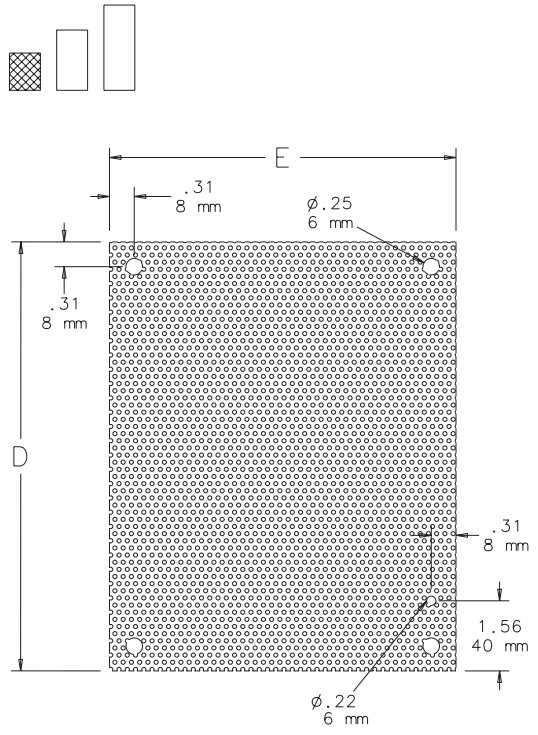

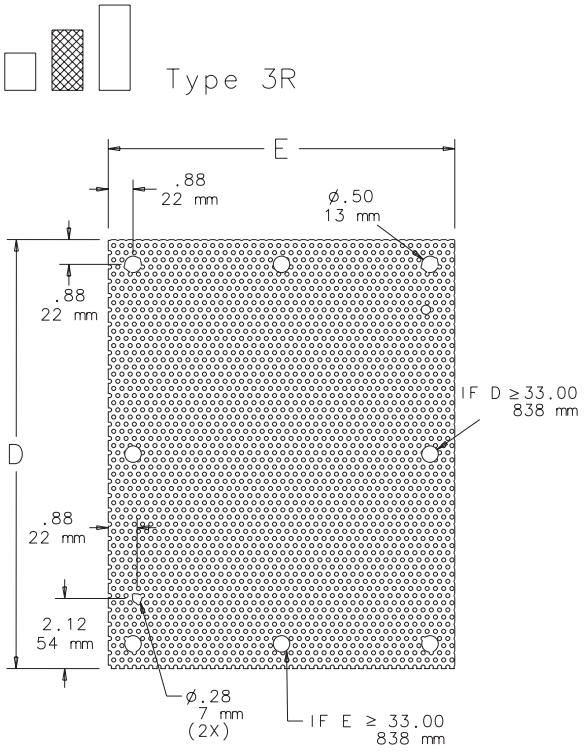

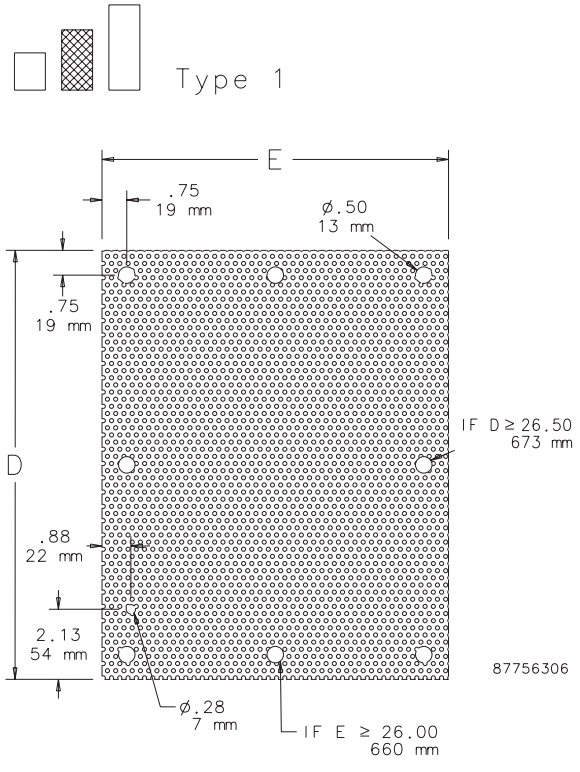

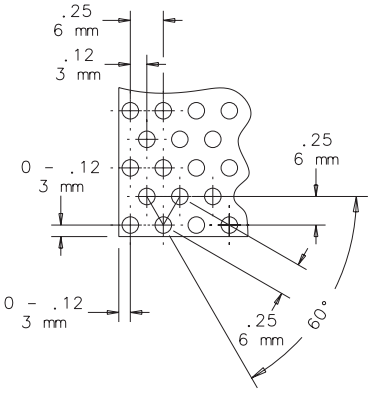

© 2009-2011 Pentair Technical Products

Panels for Enclosures

Panels for Junction Boxes

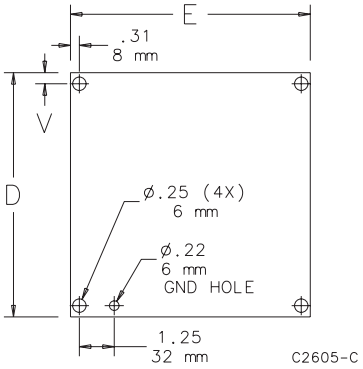

Steel panels are 14 gauge, finished with white polyester powder paint or with a conductive, corrosion-resistant coating. Stainless steel panels are 14 gauge Type 304 and have a commercial #2B finish which is protected on one side with a plastic film. Aluminum panels are 5052-H32 aluminum alloy 0.080-in. (2-mm) thick and protected on one side with a plastic film. Panel mounting hardware is furnished with all enclosures which accept these panels.

Bulletin: PNLJ, PNLWM

Catalog Number	Material	Panel Size D x E (in.)	Panel Size D x E (mm)	V (in.)	V (mm)
A6P4	Painted steel	4.88 x 2.88	124 x 73	0.31	8
A6P4G	Conductive steel	4.88 x 2.88	124 x 73	0.31	8
A6P4SS	Stainless Steel	4.88 x 2.88	124 x 73	0.31	8
A6P4AL	Aluminum	4.88 x 2.88	124 x 73	0.31	8
A6P6	Painted steel	4.88 x 4.88	124 x 124	0.31	8
A6P6G	Conductive steel	4.88 x 4.88	124 x 124	0.31	8
A6P6SS	Stainless Steel	4.88 x 4.88	124 x 124	0.31	8
A6P6AL	Aluminum	4.88 x 4.88	124 x 124	0.31	8
A8P6	Painted steel	6.75 x 4.88	171 x 124	0.25	6
A8P6G	Conductive steel	6.75 x 4.88	171 x 124	0.25	6
A8P6SS	Stainless Steel	6.75 x 4.88	171 x 124	0.25	6
A8P6AL	Aluminum	6.75 x 4.88	171 x 124	0.25	6
A8P8	Painted steel	6.75 x 6.88	171 x 175	0.25	6
A8P8AL	Aluminum	6.75 x 6.88	171 x 175	0.25	6
A10P8	Painted steel	8.75 x 6.88	222 x 175	0.25	6
A10P8G	Conductive steel	8.75 x 6.88	222 x 175	0.25	6
A10P8SS	Stainless Steel	8.75 x 6.88	222 x 175	0.25	6
A10P8AL	Aluminum	8.75 x 6.88	222 x 175	0.25	6
A10P10	Painted steel	8.75 x 8.88	222 x 226	0.25	6
A10P10G	Conductive steel	8.75 x 8.88	222 x 226	0.25	6
A10P10AL	Aluminum	8.75 x 8.88	222 x 226	0.25	6
A12P6	Painted steel	10.75 x 4.88	273 x 124	0.25	6
A12P6G	Conductive steel	10.75 x 4.88	273 x 124	0.25	6
A12P10	Painted steel	10.75 x 8.88	273 x 226	0.25	6
A12P10G	Conductive steel	10.75 x 8.88	273 x 226	0.25	6
A12P10SS	Stainless Steel	10.75 x 8.88	273 x 226	0.25	6
A12P10AL	Aluminum	10.75 x 8.88	273 x 226	0.25	6
A12P12	Painted steel	10.75 x 10.88	273 x 276	0.25	6
A12P12G	Conductive steel	10.75 x 10.88	273 x 276	0.25	6
A12P12SS	Stainless Steel	10.75 x 10.88	273 x 276	0.25	6
A14P8	Painted steel	12.75 x 6.88	324 x 175	0.25	6
A14P8G	Conductive steel	12.75 x 6.88	324 x 175	0.25	6
A14P12	Painted steel	12.75 x 10.88	324 x 276	0.25	6
A14P12G	Conductive steel	12.75 x 10.88	324 x 276	0.25	6
A14P12SS	Stainless Steel	12.75 x 10.88	324 x 276	0.25	6
A14P12AL	Aluminum	12.75 x 10.88	324 x 276	0.25	6
A16P10	Painted steel	14.75 x 8.88	375 x 226	0.25	6
A16P10G	Conductive steel	14.75 x 8.88	375 x 226	0.25	6
A16P14	Painted steel	14.75 x 12.88	375 x 327	0.25	6
A16P14G	Conductive steel	14.75 x 12.88	375 x 327	0.25	6
A16P14SS	Stainless Steel	14.75 x 12.88	375 x 327	0.25	6
A16P14AL	Aluminum	14.75 x 12.88	375 x 327	0.25	6
A18P16	Painted steel	16.75 x 14.88	425 x 378	0.25	6
A18P16G	Conductive steel	16.75 x 14.88	425 x 378	0.25	6
A18P16SS	Stainless Steel	16.75 x 14.88	425 x 378	0.25	6
A18P16AL	Aluminum	16.75 x 14.88	425 x 378	0.25	6

 © 2009-2011 Pentair Technical Products

Composite Panels for Junction Boxes and UL/NEMA Wall-Mount Enclosures

Manufactured from light-brown, reinforced phenolic laminate sheet stock. This material has exceptional strength and chemical resistance, which makes it ideally suited for the most corrosive environments. Composite panels are intended for use in corrosion-resistant enclosures. Panel sizes are available for junction boxes and UL/NEMA size enclosures. Composite panels may be drilled and tapped but work equally as well with self-threading or thread-cutting screws. Refer to the table for recommended mounting specifications.

Bulletin: PNLC

Standard Product

Catalog Number	Panel Size D x E in./mm	R in./mm	S in./mm	Hole Dia. in./mm	Panel Thickness in./mm
A6P4C	4.88 x 2.88 124 x 73	4.25 108	2.25 57	0.25 6	0.12 3
A6P6C	4.88 x 4.88 124 x 124	4.25 108	4.25 108	0.25 6	0.12 3
A8P6C	6.75 x 4.88 171 x 124	6.25 159	4.25 108	0.25 6	0.12 3
A10P8C	8.75 x 6.88 222 x 175	8.25 210	6.25 159	0.25 6	0.12 3
A12P10C	10.75 x 8.88 273 x 226	10.25 260	8.25 210	0.25 6	0.19 5
A14P12C	12.75 x 10.88 324 x 276	12.25 311	10.25 260	0.25 6	0.19 5
A16P14C	14.75 x 12.88 375 x 327	14.25 362	12.25 311	0.25 6	0.19 5
A18P16C	16.75 x 14.88 425 x 379	16.25 413	14.25 362	0.25 6	0.19 5
A20P16C	17.00 x 13.00 432 x 330	15.25 387	11.25 286	0.50 13	0.19 5
A20P20C	17.00 x 17.00 432 x 432	15.25 387	15.25 387	0.50 13	0.19 5
A24P20C	21.00 x 17.00 533 x 432	19.25 489	15.25 387	0.50 13	0.19 5
A24P24C	21.00 x 21.00 533 x 533	19.25 489	19.25 489	0.50 13	0.19 5
A30P24C	27.00 x 21.00 686 x 533	25.25 641	19.25 489	0.50 13	0.19 5

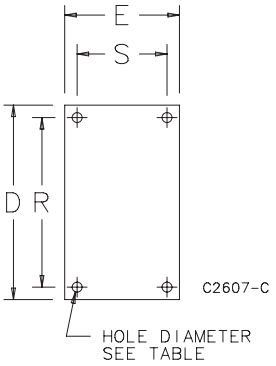

Composite Panel Mounting Recommendations

Screw Type	Screw Size	Hole Size in./mm	Max. Insertion Torque (lb.) in 0.12 in. Material	Max. Insertion Torque (lb.) in 0.19 in. Material	Max. Load (lb. per screw) in 0.12 in. Material	Max. Load (lb. per screw) in 0.19 in. Material
Machine (tapped hole)	8-32	.136 3	15	25	40	45
Machine (tapped hole)	10-32	.161 4	15	25	35	40
Machine (tapped hole)	1/4-20	.204 5	20	25	30	35
Thread Cutting Type T	8-32	.144 4	15	25	40	45
Thread Cutting Type T	10-32	.166 4	15	25	35	40
Thread Cutting Type T	1/4-20	.288 7	20	25	30	35
Sheet Metal A-B	8-32	.147 4	Not recommended	10	40	45
Sheet Metal A-B	10-32	.166 4	Not recommended	10	35	40
Sheet Metal A-B	1/4-20	.221 6	Not recommended	15	30	35

© 2009-2011 Pentair Technical Products

Panels for Enclosures

Junction Box and Wall-Mount Enclosure Swing-Out Panel Kit

Kits allow mounting standard Hoffman junction box and NEMA style panels (purchase separately) near the front of the enclosure for easy access to or reading of gauges, switches, pilot lights and other components. Kits consist of heavy-gauge brackets and hinges which are easily installed by drilling small holes in the sides of the enclosure and bolting the brackets in place. External screws are stainless steel; internal components are plated steel. All mounting hardware and instructions are provided. Sealing washers ensure the enclosure will meet original JIC or NEMA standards after installation.
Swing-Out Panel Kits do not fit single-door disconnect enclosures.

Bulletin: A80

Catalog Number	Description	Maximum Load (lb.)	Maximum Load (kg)	Use In
AJCDFK	Junction Box Kit	25	11.3	- Junction boxes where A x B is 8.00 x 6.00 in. (203 x 152 mm) or larger - HCLO Type 3R enclosures where A x B is 16.00 x 12.00 in. (406 x 305 mm) or smaller
ANADFK	Wall-Mount Enclosure Kit	100	45.4	- One-door Type 4, 12 and 13 enclosures where A x B is 12.00 x 12.00 in. (305 x 305 mm) or larger - HCLO Type 3R enclosures where A x B is 16.00 x 16.00 in. (406 x 406 mm) or larger - HCR Type 3R enclosures where A x B is 16.00 x 12.00 (406 x 305 mm) or larger - Type 1 enclosures where A x B is 42.00 x 30.00 in. (1067 x 762 mm) or larger

Both kits maintain UL Type 4 rating when properly installed in a Hoffman enclosure.

Maximum load includes the weight of the panel plus the weight of the components, with the weight of the components spread evenly over the panel.

Junction Box Swing-Out Panel Kit

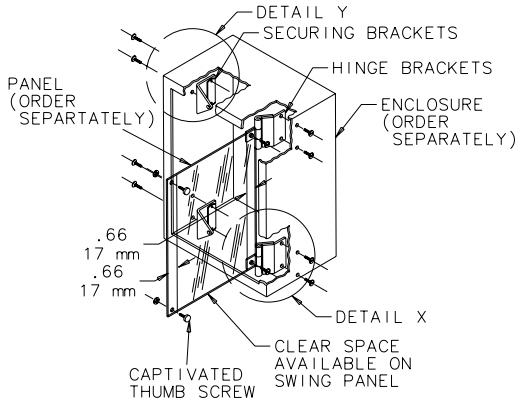

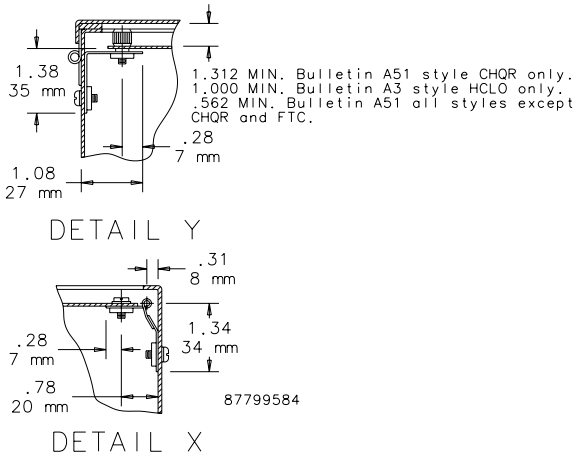

Wall-Mount Enclosure Swing-Out Panel Kit

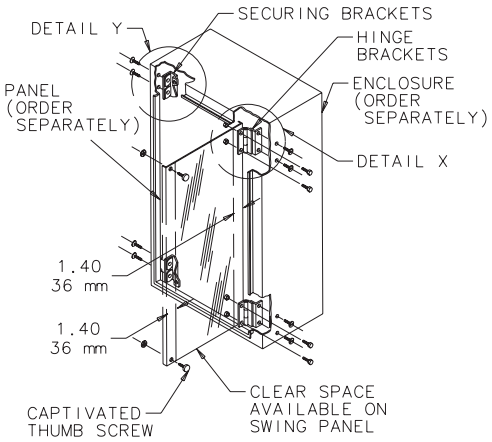

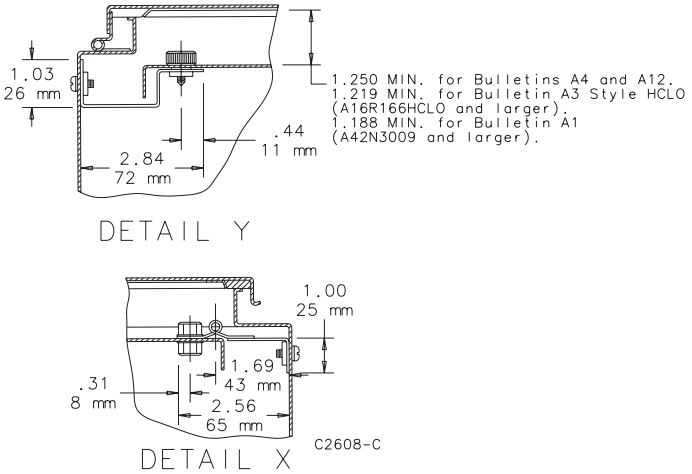

 © 2009-2011 Pentair Technical Products

Panels for Enclosures

Panels for Type 1 Enclosures and Small Type 3R Enclosures

Steel panels are 14 gauge, finished with white polyester powder paint. Panel mounting hardware is furnished with enclosure.

Bulletin: PNLT1

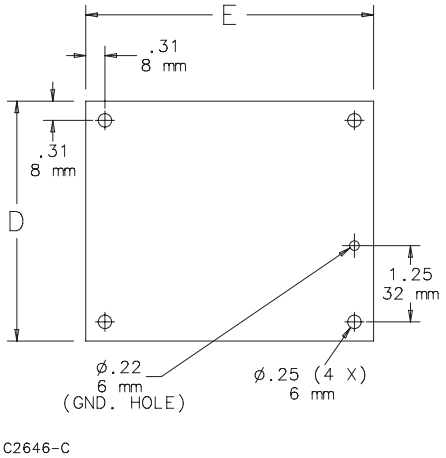

Catalog Number	Panel Size D x E (in.)	Panel Size D x E (mm)
A6N4P	4.25 x 2.25	108 x 57
A6N6P	4.25 x 4.25	108 x 108
A8N6P	6.25 x 4.25	159 x 108
A8N8P	6.25 x 6.25	159 x 159
A10N8P	8.25 x 6.25	210 x 159
A10N10P	8.25 x 8.25	210 x 210
A12N10P	10.25 x 8.25	260 x 210
A12N12P	10.25 x 10.25	260 x 260
A14N12P	12.25 x 10.25	311 x 260
A16N12P	14.25 x 10.25	362 x 260
A20N12P	18.25 x 10.25	464 x 260

Panels for Medium Type 1 Enclosures

Steel panels are 14 or 12 gauge with a white polyester powder paint finish. Panel mounting hardware is furnished with enclosure.

Bulletin: PNLT1

Catalog Number	Panel Thickness (ga.)	Panel Size D x E (in.)	Panel Size D x E (mm)
A16N12MP	14	13.00 x 10.50	330 x 267
A20N12MP	14	17.00 x 10.50	432 x 267
A16N16MP	14	13.00 x 14.50	330 x 368
A20N16MP	14	17.00 x 14.50	432 x 368
A24N16MP	14	21.00 x 14.50	533 x 368
A18N18MP	14	15.00 x 16.50	381 x 419
A16N20MP	14	13.00 x 18.50	330 x 470
A20N20MP	14	17.00 x 18.50	432 x 470
A24N20MP	14	21.00 x 18.50	533 x 470
A30N20MP	14	26.00 x 18.50	660 x 470
A24N24MP	12	21.00 x 22.50	533 x 571
A30N24MP	12	26.00 x 22.50	660 x 571
A36N24MP	12	32.00 x 22.50	813 x 571
A30N30MP	12	26.00 x 28.50	660 x 724
A36N30MP	12	32.00 x 28.50	813 x 724

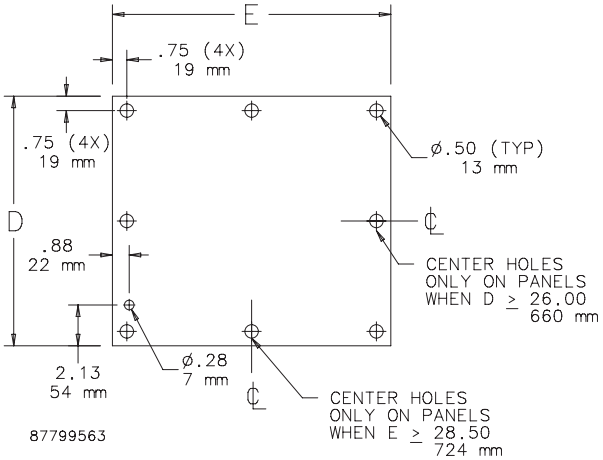

© 2009-2011 Pentair Technical Products

Panels for Type 3R, 4, 4X, 12 and 13 Enclosures

Steel panels are 12 gauge, finished with white polyester powder paint or a conductive, corrosion-resistant coating. Larger panels have flanges on two or four sides. Some larger steel panels are 10 gauge and include extra holes for panel lifting. Aluminum panels are 5052-H32 aluminum alloy. Larger panels have flanges on four sides. Aluminum panels are protected on one side with a plastic film. Stainless steel panels are Type 316 stainless steel. Panel mounting hardware is furnished with all enclosures which accept these panels.

Bulletin: PNLFS, PNLJ, PNLWM

Catalog Number	Material	Panel Size D x E (in.)	Panel Size D x E (mm)	Panel Gauge or Thickness	Edge Flanges	T (in.)	T (mm)	Number of Holes
A12P24	Painted steel	9.00 x 21.00	229 x 533	12 ga.	0	—	—	4
A12P24G	Conductive steel	9.00 x 21.00	229 x 533	12 ga.	0	—	—	4
A16P12	Painted steel	13.00 x 9.00	330 x 229	12 ga.	0	—	—	4
A16P12G	Conductive steel	13.00 x 9.00	330 x 229	12 ga.	0	—	—	4
A16P12SS6	Stainless Steel	13.00 x 9.00	330 x 229	12 ga.	0	—	—	4
A16P12AL	Aluminum	13.00 x 9.00	330 x 229	0.10 in./3 mm	0	—	—	4
A16P16	Painted steel	13.00 x 13.00	330 x 330	12 ga.	0	—	—	4
A16P16G	Conductive steel	13.00 x 13.00	330 x 330	12 ga.	0	—	—	4
A16P16SS6	Stainless Steel	13.00 x 13.00	330 x 330	12 ga.	0	—	—	4
A16P16AL	Aluminum	13.00 x 13.00	330 x 330	0.10 in./3 mm	0	—	—	4
A18P18	Painted steel	15.00 x 15.00	381 x 381	12 ga.	0	—	—	4
A18P18G	Conductive steel	15.00 x 15.00	381 x 381	12 ga.	0	—	—	4
A20P12	Painted steel	17.00 x 9.00	432 x 229	12 ga.	0	—	—	4
A20P12G	Conductive steel	17.00 x 9.00	432 x 229	12 ga.	0	—	—	4
A20P16	Painted steel	17.00 x 13.00	432 x 330	12 ga.	0	—	—	4
A20P16G	Conductive steel	17.00 x 13.00	432 x 330	12 ga.	0	—	—	4
A20P16SS6	Stainless Steel	17.00 x 13.00	432 x 330	12 ga.	0	—	—	4
A20P16AL	Aluminum	17.00 x 13.00	432 x 330	0.10 in./3 mm	0	—	—	4
A20P20	Painted steel	17.00 x 17.00	432 x 432	12 ga.	0	—	—	4
A20P20G	Conductive steel	17.00 x 17.00	432 x 432	12 ga.	0	—	—	4
A20P20SS6	Stainless steel	17.00 x 17.00	432 x 432	12 ga.	0	—	—	4
A20P20AL	Aluminum	17.00 x 17.00	432 x 432	0.10 in./3 mm	0	—	—	4
A24P16	Painted steel	21.00 x 13.00	533 x 330	12 ga.	0	—	—	4
A24P16G	Conductive steel	21.00 x 13.00	533 x 330	12 ga.	0	—	—	4
A24P16SS6	Stainless Steel	21.00 x 13.00	533 x 330	12 ga.	0	—	—	4
A24P20	Painted steel	21.00 x 17.00	533 x 432	12 ga.	2	0.75	19	4
A24P20G	Conductive steel	21.00 x 17.00	533 x 432	12 ga.	2	0.75	19	4
A24P20SS6	Stainless Steel	21.00 x 17.00	533 x 432	12 ga.	2	0.75	19	4
A24P20AL	Aluminum	21.00 x 17.00	533 x 432	0.10 in./3 mm	4	0.75	19	4
A24P24	Painted steel	21.00 x 21.00	533 x 533	12 ga.	2	0.75	19	4
A24P24G	Conductive steel	21.00 x 21.00	533 x 533	12 ga.	2	0.75	19	4
A24P24SS6	Stainless Steel	21.00 x 21.00	533 x 533	12 ga.	2	0.75	19	4
A24P24AL	Aluminum	21.00 x 21.00	533 x 533	0.10 in./3 mm	2	0.75	19	4
A30P16	Painted steel	27.00 x 13.00	686 x 330	12 ga.	2	0.75	19	4
A30P16G	Conductive steel	33.00 x 27.00	838 x 686	12 ga.	2	0.75	19	4
A30P20	Painted steel	27.00 x 17.00	686 x 432	12 ga.	2	0.75	19	4
A30P20G	Conductive steel	27.00 x 17.00	686 x 432	12 ga.	2	0.75	19	4
A30P20SS6	Stainless Steel	27.00 x 17.00	686 x 432	12 ga.	2	0.75	19	4
A30P24	Painted steel	27.00 x 21.00	686 x 533	12 ga.	2	0.75	19	4
A30P24G	Conductive steel	27.00 x 21.00	686 x 533	12 ga.	2	0.75	19	4
A30P24SS6	Stainless Steel	27.00 x 21.00	686 x 533	12 ga.	2	0.75	19	4
A30P24AL	Aluminum	27.00 x 21.00	686 x 533	0.10 in./3 mm	2	0.75	19	4
A30P30	Painted steel	27.00 x 27.00	686 x 686	12 ga.	4	0.75	19	4
A30P30G	Conductive steel	27.00 x 27.00	686 x 686	12 ga.	4	0.75	19	4
A30P30SS6	Stainless Steel	27.00 x 27.00	686 x 686	12 ga.	4	0.75	19	4
A36P16	Painted steel	33.00 X 13.00	838 X 330	12 ga.	2	0.75	19	4
A36P16G	Conductive steel	33.00 x 13.00	838 x 330	12 ga.	2	0.75	19	4
A36P24	Painted steel	33.00 x 21.00	838 x 533	12 ga.	2	0.75	19	6
A36P24G	Conductive steel	33.00 x 21.00	838 x 533	12 ga.	2	0.75	19	6
A36P24SS6	Stainless Steel	33.00 x 21.00	838 x 533	12 ga.	2	0.75	19	6
A36P24AL	Aluminum	33.00 x 21.00	838 x 533	0.10 in./3 mm	2	0.75	19	6
A36P30	Painted steel	33.00 x 27.00	838 x 686	12 ga.	4	0.75	19	6
A36P30G	Conductive steel	33.00 x 27.00	838 x 686	12 ga.	4	0.75	19	6
A36P30SS6	Stainless Steel	33.00 x 27.00	838 x 686	12 ga.	4	0.75	19	6
A36P30AL	Aluminum	33.00 x 27.00	838 x 686	0.10 in./3 mm	4	0.75	19	6
A36P36	Painted steel	33.00 x 33.00	838 x 838	12 ga.	4	0.75	19	8
A36P36G	Conductive steel	33.00 x 33.00	838 x 838	12 ga.	4	0.75	19	8
A36P36SS6	Stainless Steel	33.00 x 33.00	838 x 838	12 ga.	4	0.75	19	8
A40P24	Painted steel	37.00 x 21.00	940 x 533	12 ga.	4	0.75	19	6
A40P24G	Conductive steel	37.00 x 21.00	940 x 533	12 ga.	4	0.75	19	6
A40P30	Painted steel	37.00 x 29.00	940 x 737	12 ga.	4	0.75	19	4 (no D dim. center hole)
A40P30G	Conductive steel	37.00 x 29.00	940 x 737	12 ga.	4	0.75	19	4 (no D dim. center hole)
A42P24	Painted steel	39.00 x 21.00	991 x 533	12 ga.	2	0.75	19	6
A42P24G	Conductive steel	39.00 x 21.00	991 x 533	12 ga.	2	0.75	19	6
A42P30	Painted steel	39.00 x 27.00	991 x 686	12 ga.	4	0.75	19	6
A42P30G	Conductive steel	39.00 x 27.00	991 x 686	12 ga.	4	0.75	19	6
A42P30SS6	Stainless Steel	39.00 x 27.00	991 x 686	12 ga.	4	0.75	19	6
A42P36	Painted steel	39.00 x 33.00	991 x 838	12 ga.	4	0.75	19	8
A42P36G	Conductive steel	39.00 x 33.00	991 x 838	12 ga.	4	0.75	19	8
A42P36SS6	Stainless Steel	39.00 x 33.00	991 x 838	12 ga.	4	0.75	19	8
A42P42	Painted steel	39.00 x 39.00	991 x 991	12 ga.	4	0.75	19	8

 © 2009-2011 Pentair Technical Products

Panels for Enclosures

Catalog Number	Material	Panel Size D x E (in.)	Panel Size D x E (mm)	Panel Gauge or Thickness	Edge Flanges	T (in.)	T (mm)	Number of Holes
A42P42G	Conductive steel	39.00 x 39.00	991 x 991	12 ga.	4	0.75	19	8
A48P24	Painted steel	45.00 x 21.00	1143 x 533	12 ga.	2	0.75	19	6
A48P24G	Conductive steel	45.00 x 21.00	1143 x 533	12 ga.	2	0.75	19	6
A48P30	Painted steel	45.00 x 27.00	1143 x 686	12 ga.	4	0.75	19	6
A48P30G	Conductive steel	45.00 x 27.00	1143 x 686	12 ga.	4	0.75	19	6
A48P36	Painted steel	45.00 x 33.00	1143 x 838	12 ga.	4	0.75	19	8
A48P36G	Conductive steel	45.00 x 33.00	1143 x 838	12 ga.	4	0.75	19	8
A48P36SS6	Stainless Steel	45.00 x 33.00	1143 x 838	12 ga.	4	0.75	19	8
A48P36AL	Aluminum	45.00 x 33.00	1143 x 838	0.10 in./3 mm	4	0.75	19	8
A48P42	Painted steel	45.00 x 39.00	1143 x 991	12 ga.	4	0.75	19	8
A48P42G	Conductive steel	45.00 x 39.00	1143 x 991	12 ga.	4	0.75	19	8
A48P48	Painted steel	44.00 x 44.00	1118 x 1118	10 ga.	4	0.88	22	8
A48P48G	Conductive steel	44.00 x 44.00	1118 x 1118	10 ga.	4	0.88	22	8
A54P42	Painted steel	50.00 x 38.00	1270 x 965	12 ga.	4	0.75	19	8
A54P42G	Conductive steel	50.00 x 38.00	1270 x 965	10 ga.	4	0.75	19	8
A60P24	Painted steel	57.00 x 21.00	1448 x 533	12 ga.	4	0.75	19	6
A60P24G	Conductive steel	57.00 x 21.00	1448 x 533	12 ga.	4	0.75	19	6
A60P30	Painted steel	57.00 x 27.00	1448 x 686	12 ga.	4	0.75	19	6
A60P30G	Conductive steel	57.00 x 27.00	1448 x 686	12 ga.	4	0.75	19	6
A60P36	Painted steel	57.00 x 33.00	1448 x 838	12 ga.	4	0.75	19	8
A60P36G	Conductive steel	57.00 x 33.00	1448 x 838	12 ga.	4	0.75	19	8
A60P36SS6	Stainless Steel	57.00 x 33.00	1448 x 838	12 ga.	4	0.75	19	8
A60P36AL	Aluminum	57.00 x 33.00	1448 x 838	0.10 in./3 mm	4	0.75	19	8
A60BFP42	Painted steel	56.00 x 38.00	1422 x 965	10 ga.	4	0.88	22	10
A60BFP42G	Conductive steel	56.00 x 38.00	1422 x 965	10 ga.	4	0.88	22	10
A60P48	Painted steel	56.00 x 44.00	1422 x 1118	10 ga.	4	0.88	22	12
A60P48G	Conductive steel	56.00 x 44.00	1422 x 1118	10 ga.	4	0.88	22	12
A60P60	Painted steel	56.00 x 56.00	1422 x 1422	10 ga.	4	0.88	22	10
A60P60G	Conductive steel	56.00 x 56.00	1422 x 1422	10 ga.	4	0.88	22	10
A72P36	Painted steel	69.00 x 33.00	1753 x 838	12 ga.	4	0.75	19	8
A72P36G	Conductive steel	69.00 x 33.00	1753 x 838	12 ga.	4	0.75	19	8
A72P60	Painted steel	68.00 x 56.00	1727 x 1422	10 ga.	4	0.88	22	12
A72P60G	Conductive steel	68.00 x 56.00	1727 x 1422	10 ga.	4	0.88	22	12
A72P72	Painted steel	68.00 x 68.00	1727 x 1727	10 ga.	4	0.88	22	10
A72P72G	Conductive steel	68.00 x 68.00	1727 x 1727	10 ga.	4	0.88	22	10

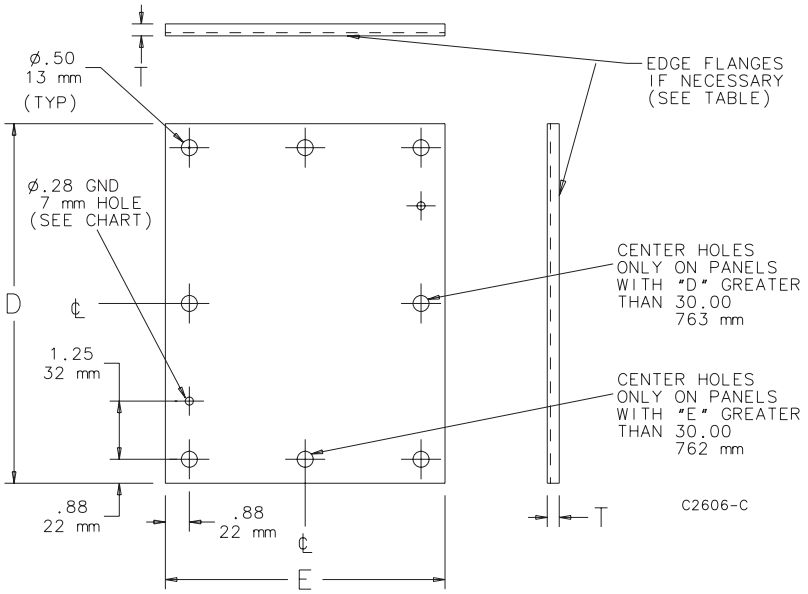

 © 2009-2011 Pentair Technical Products

Panels for Large Bulletin A27, A28, A28S4 and A34 Multi-Door Enclosures

Extra panels for large enclosures (Bulletins A27, A28, A28S4 and A34) can be ordered for panel assembly prior to receiving the enclosures (enclosures include panels). Panels are 10 gauge steel with .80-in. (20-mm) flanges on four sides. Finish is white polyester powder paint or a conductive, corrosion-resistant coating. Two extra holes are provided for lifting and installing panels. Mounting hardware included with enclosure.

Bulletin: PNLFS

Catalog Number	Finish	Panel Size D x E (in.)	Panel Size D x E (mm)	Number of Holes	Fits Enclosure Height
A72PM28	Painted steel	60.00 x 21.75	1524 x 552	8	72 in.
A72PM28G	Conductive	60.00 x 21.75	1524 x 552	8	72 in.
A72PM34	Painted steel	60.00 x 27.75	1524 x 705	8	72 in.
A72PM34G	Conductive	60.00 x 27.75	1524 x 705	8	72 in.
A72PM40	Painted steel	60.00 x 33.75	1524 x 857	8	72 in.
A72PM40G	Conductive	60.00 x 33.75	1829 x 857	8	72 in.
A72PM54	Painted steel	60.00 x 48.00	1524 x 1219	10	72 in.
A72PM54G	Conductive	60.00 x 48.00	1524 x 1219	10	72 in.
A72PM66	Painted steel	60.00 x 60.00	1524 x 1524	10	72 in.
A72PM66G	Conductive	60.00 x 60.00	1524 x 1524	10	72 in.
A72PM78	Painted steel	60.00 x 72.00	1524 x 1829	12	72 in.
A72PM78G	Conductive	60.00 x 72.00	1524 x 1829	12	72 in.
A84PM40	Painted steel	72.00 x 33.75	1829 x 857	8	84 in.
A84PM40G	Conductive	72.00 x 33.75	1829 x 857	8	84 in.
A84PM78	Painted steel	72.00 x 72.00	1829 x 1829	12	84 in.
A84PM78G	Conductive	72.00 x 72.00	1829 x 1829	12	84 in.
A86PM37	Painted steel	78.00 x 34.00	1981 x 864	8	86 in.
A86PM37G	Conductive	78.00 x 34.00	1981 x 864	8	86 in.
A86PM75	Painted steel	78.00 x 70.00	1981 x 1778	12	86 in.
A86PM75G	Conductive	78.00 x 70.00	1981 x 1778	12	86 in.
A90PM40	Painted steel	78.00 x 33.75	1981 x 857	8	90 in.
A90PM40G	Conductive	78.00 x 33.75	1981 x 857	8	90 in.
A90PM78	Painted steel	78.00 x 72.00	1981 x 1829	12	90 in.
A90PM78G	Conductive	78.00 x 72.00	1981 x 1829	12	90 in.

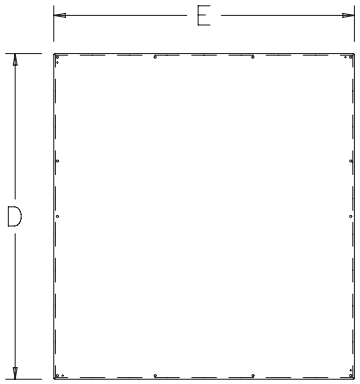

11C59182

 © 2009-2011 Pentair Technical Products

Panels for Free-Stand Type 1 Large One-Door Enclosures

Panels for free-stand Type 1 large one-door standard and disconnect enclosures are 12 gauge steel. Panels have either polyester powder paint finish or a conductive, corrosion-resistant coating.

Bulletin: A26P, A38P

Catalog Number	Finish	Panel Size D x E (in.)	Panel Size D x E (mm)
A37P21N	Painted steel	37.16 x 21.50	944 x 546
A37P21NG	Conductive	37.16 x 21.50	944 x 546
A49P21N	Painted steel	49.16 x 21.50	1249 x 546
A49P21NG	Conductive	49.16 x 21.50	1249 x 546
A61P21N	Painted steel	61.16 x 21.50	1553 x 546
A73P21N	Painted steel	73.16 x 21.50	1858 x 546
A73P21NG	Conductive	73.16 x 21.50	1858 x 546
A49P32N	Painted steel	49.16 x 32.00	1249 x 813
A49P32NG	Conductive	49.16 x 32.00	1249 x 813
A61P32N	Painted steel	61.16 x 32.00	1553 x 813
A61P32NG	Conductive	61.16 x 32.00	1553 x 813
A73P32N	Painted steel	73.16 x 32.00	1858 x 813
A73P32NG	Conductive	73.16 x 32.00	1858 x 813

Panels for Free-Stand Type 1 Large Two-Door Enclosures

Panels for free-stand Type 1 large two-door standard and disconnect enclosures are 10 gauge steel. Panels have either polyester powder paint finish or a conductive, corrosion-resistant coating.

Bulletin: A38P

Catalog Number	Finish	Panel Size D x E (in.)	Panel Size D x E (mm)
A37P48N	Painted steel	37.16 x 48.00	944 x 1219
A37P48NG	Conductive	37.16 x 48.00	944 x 1219
A49P48N	Painted steel	49.16 x 48.00	1249 x 1219
A49P48NG	Conductive	49.16 x 48.00	1249 x 1219
A49P68N	Painted steel	49.16 x 68.00	1249 x 1727
A49P68NG	Conductive	49.16 x 68.00	1249 x 1727
A61P68N	Painted steel	61.16 x 68.00	1553 x 1727
A61P68NG	Conductive	61.16 x 68.00	1553 x 1727
A73P68N	Painted steel	73.16 x 68.00	1858 x 1727
A73P68NG	Conductive	73.16 x 68.00	1858 x 1727

 © 2009-2011 Pentair Technical Products

Panels for Free-Stand Type 4, 4X and 12 Single- and Dual-Access One-Door Enclosures with Mounting Channel

Panels for one-door, single-access and one-door, dual-access Free-Stand Type 12 Enclosures, Free-Stand Type 4 Enclosures and One-Door Type 4X Free-Stand Fiberglass Enclosures. Panels are 12 gauge steel and can be positioned anywhere along horizontal mounting channels (see dimension drawing Sections B-B for limitations). Half-length panels can be located in the upper or lower portion of the enclosure. Panels are finished with white polyester powder paint or a conductive, corrosion-resistant coating and furnished with plated mounting hardware.

Bulletin: PNL30, PNLFS

Catalog Number	Description	Finish	Panel Size (in.)	Panel Size (mm)	Fits Enclosure A x B (in.)	Fits Enclosure A x B (mm)
A60P24F1	Full Panel	Painted steel	48.00 x 20.00	1218 x 508	60.00 x 24.00	1524 x 610
A60P24F1G	Full Panel	Conductive	48.00 x 20.00	1218 x 508	60.00 x 24.00	1524 x 610
A60P24F2	Half Panel	Painted steel	24.88 x 20.00	632 x 508	60.00 x 24.00	1524 x 610
A60P24F2G	Half Panel	Conductive	24.88 x 20.00	632 x 508	60.00 x 24.00	1524 x 610
A72P24F1	Full Panel	Painted steel	60.00 x 20.00	1524 x 508	72.00 x 24.00	1829 x 610
A72P24F1G	Full Panel	Conductive	60.00 x 20.00	1524 x 508	72.00 x 24.00	1829 x 610
A72P24F2	Half Panel	Painted steel	30.88 x 20.00	784 x 508	72.00 x 24.00	1829 x 610
A72P24F2G	Half Panel	Conductive	30.88 x 20.00	784 x 508	72.00 x 24.00	1829 x 610
A90P24F1	Full Panel	Painted steel	78.00 x 20.00	1981 x 508	90.00 x 24.00	2286 x 610
A90P24F1G	Full Panel	Conductive	78.00 x 20.00	1981 x 508	90.00 x 24.00	2286 x 610
A90P24F2	Half Panel	Painted steel	39.88 x 20.00	1013 x 508	90.00 x 24.00	2286 x 610
A90P24F2G	Half Panel	Conductive	39.88 x 20.00	1013 x 508	90.00 x 24.00	2286 x 610
A72P30F1	Full Panel	Painted steel	60.00 x 26.00	1524 x 660	72.00 x 30.00	1829 x 762
A72P30F1G	Full Panel	Conductive	60.00 x 26.00	1524 x 660	72.00 x 30.00	1829 x 762
A72P30F2	Half Panel	Painted steel	30.88 x 26.00	784 x 660	72.00 x 30.00	1829 x 762
A72P30F2G	Half Panel	Conductive	30.88 x 26.00	784 x 660	72.00 x 30.00	1829 x 762
A60P36F1	Full Panel	Painted steel	48.00 x 32.00	1219 x 813	60.00 x 36.00	1524 x 914
A60P36F1G	Full Panel	Conductive	48.00 x 32.00	1219 x 813	60.00 x 36.00	1524 x 914
A60P36F2	Half Panel	Painted steel	24.88 x 32.00	632 x 813	60.00 x 36.00	1524 x 914
A60P36F2G	Half Panel	Conductive	24.88 x 32.00	632 x 813	60.00 x 36.00	1524 x 914
A72P36F1	Full Panel	Painted steel	60.00 x 32.00	1524 x 813	72.00 x 36.00	1829 x 914
A72P36F1G	Full Panel	Conductive	60.00 x 32.00	1524 x 813	72.00 x 36.00	1829 x 914
A72P36F2	Half Panel	Painted steel	30.88 x 32.00	784 x 813	72.00 x 36.00	1829 x 914
A72P36F2G	Half Panel	Conductive	30.88 x 32.00	784 x 813	72.00 x 36.00	1829 x 914
A90P36F1	Full Panel	Painted steel	78.00 x 32.00	1981 x 813	90.00 x 36.00	2286 x 914
A90P36F1G	Full Panel	Conductive	78.00 x 32.00	1981 x 813	90.00 x 36.00	2286 x 914
A90P36F2	Half Panel	Painted steel	39.88 x 32.00	1013 x 813	90.00 x 36.00	2286 x 914
A90P36F2G	Half Panel	Conductive	39.88 x 32.00	1013 x 813	90.00 x 36.00	2286 x 914

Use combinations of panels for 3-5 door A 28 enclosures.

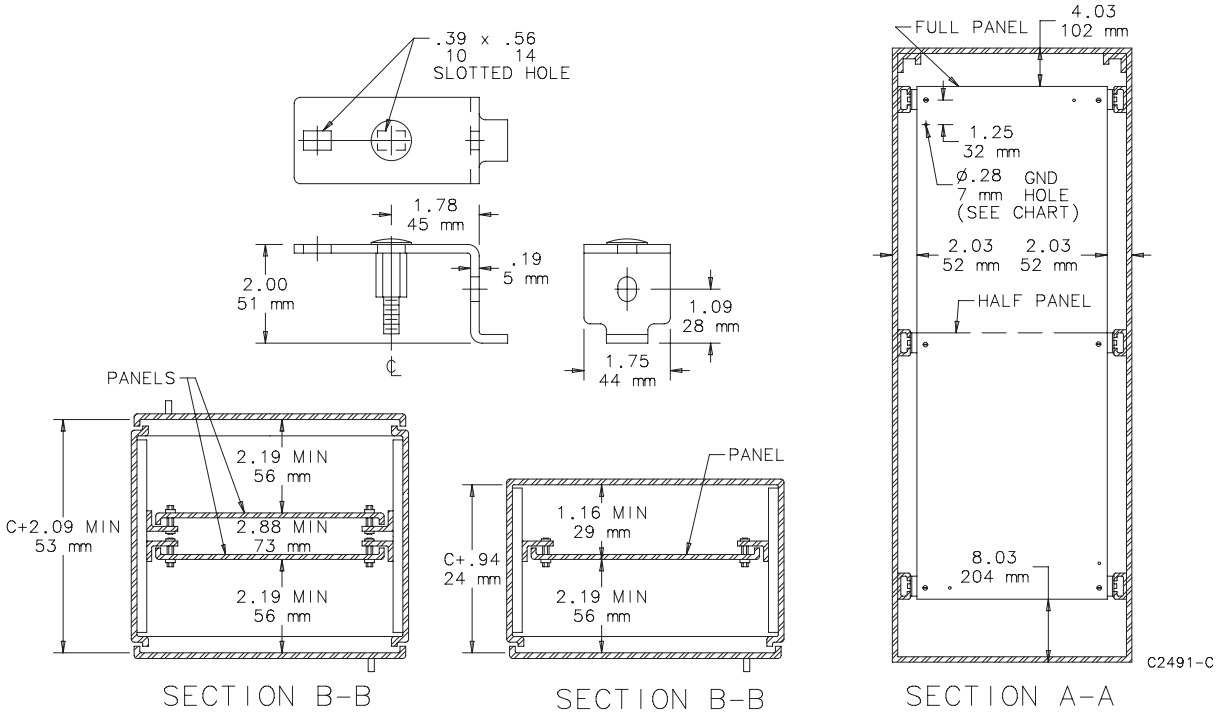

 © 2009-2011 Pentair Technical Products

Panels for Free-Stand Type 4, 4X and 12 Single- and Dual-Access Two-Door Enclosures with Mounting Channel

Panels for two-door single access and two-door dual access Free-Stand Type 4, 4X and 12 Enclosures with mounting channel are 10 gauge steel and can be positioned anywhere along horizontal mounting channels (see Sections B-B for limitations). Half-length panels can be located in the upper or lower portion of the enclosure. Some assembly is required.

Panels are finished with white polyester powder paint or a conductive, corrosion-resistant coating and furnished with plated mounting hardware.

Center support is furnished with each full panel or half panel for two-door enclosures. The center support attaches to the top and bottom mounting channels and can be positioned from front to back in the enclosure. The center support can be used with heavy duty panel supports to support panels of various heights.

Bulletin: PNL30, PNLFS

Catalog Number	Description	Fits Enclosure A x B (in.)	Fits Enclosure A x B (mm)	Panel Size (in.)	Panel Size (mm)	G (in.)	G (mm)
A60P48F1	Full Panel	60.00 x 48.00	1524 x 1219	48.00 x 44.00	1219 x 1118	23.12	587
A60P48F1G	Full Panel	60.00 x 48.00	1524 x 1219	48.00 x 44.00	1219 x 1118	23.12	587
A72P48F1	Full Panel	72.00 x 48.00	1829 x 1219	60.00 x 44.00	1524 x 1118	29.12	740
A72P48F1G	Full Panel	72.00 x 48.00	1829 x 1219	60.00 x 44.00	1524 x 1118	29.12	740
A72P48F2	Half Panel	72.00 x 48.00	1829 x 1219	30.88 x 44.00	784 x 1118	29.12	740
A72P48F2G	Half Panel	72.00 x 48.00	1829 x 1219	30.88 x 44.00	784 x 1118	29.12	740
A90P48F1	Full Panel	90.00 x 48.00	2286 x 1219	78.00 x 44.00	1981 x 1118	38.12	968
A90P48F1G	Full Panel	90.00 x 48.00	2286 x 1219	78.00 x 44.00	1981 x 1118	38.12	968
A90P48F2	Half Panel	90.00 x 48.00	2286 x 1219	39.88 x 44.00	1013 x 1118	38.12	968
A90P48F2G	Half Panel	90.00 x 48.00	2286 x 1219	39.88 x 44.00	1013 x 1118	38.12	968
A72P60F1	Full Panel	72.00 x 60.00	1829 x 1524	60.00 x 56.00	1524 x 1422	29.12	740
A72P60F1G	Full Panel	72.00 x 60.00	1829 x 1524	60.00 x 56.00	1524 x 1422	29.12	740
A72P60F2	Half Panel	72.00 x 60.00	1829 x 1524	30.88 x 56.00	784 x 1422	29.12	740
A72P60F2G	Half Panel	72.00 x 60.00	1829 x 1524	30.88 x 56.00	784 x 1422	29.12	740
A72P72F1	Full Panel	72.00 x 72.00	1829 x 1829	60.00 x 68.00	1524 x 1727	29.12	740
A72P72F1G	Full Panel	72.00 x 72.00	1829 x 1829	60.00 x 68.00	1524 x 1727	29.12	740
A72P72F2	Half Panel	72.00 x 72.00	1829 x 1829	30.88 x 68.00	784 x 1727	29.12	740
A72P72F2G	Half Panel	72.00 x 72.00	1829 x 1829	30.88 x 68.00	784 x 1727	29.12	740
A90P72F1	Full Panel	90.00 x 72.00	2286 x 1829	78.00 x 68.00	1981 x 1727	38.12	968
A90P72F1G	Full Panel	90.00 x 72.00	2286 x 1829	78.00 x 68.00	1981 x 1727	38.12	968
A90P72F2	Half Panel	90.00 x 72.00	2286 x 1829	39.88 x 68.00	1013 x 1727	38.12	968
A90P72F2G	Half Panel	90.00 x 72.00	2286 x 1829	39.88 x 68.00	1013 x 1727	38.12	968

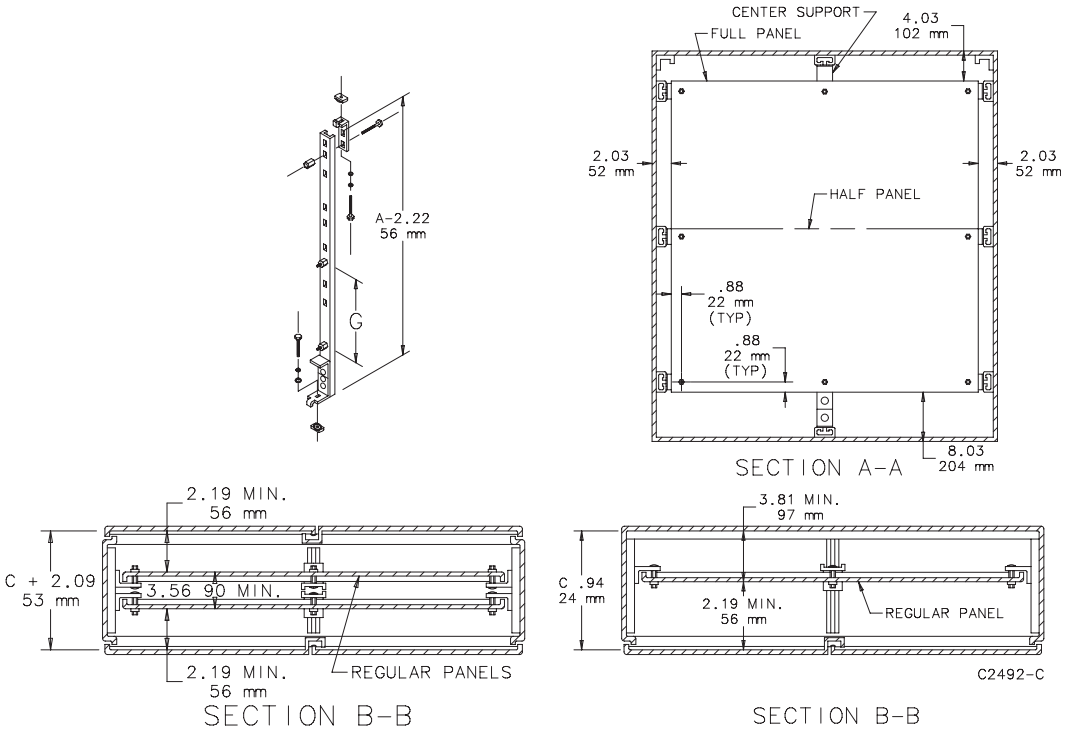

 © 2009-2011 Pentair Technical Products

Panels for Enclosures

Side-Mounted Panels

Panels provide extra mounting space on the sides of enclosures. 12 gauge steel side-mounting panels are painted white. Conductive panels are steel with a conductive, corrosion-resistant coating. Panels attach securely to mounting channels. Plated steel mounting hardware is furnished.

Bulletin: PNL30, PNLFS

Catalog Number	Description	Panel Size D x E in./mm	Fits Enclosure A in./mm
A60SMP14	Painted steel	48.00 x 14.00 1219 x 356	60.00 1524
A60SMP14G	Conductive	48.00 x 14.00 1219 x 356	60.00 1524
A72SMP14	Painted steel	60.00 x 14.00 1524 x 356	72.00 1829
A72SMP14G	Conductive	60.00 x 14.00 1524 x 356	72.00 1829
A72SMP20	Painted steel	60.00 x 20.00 1524 x 508	72.00 1829
A72SMP20G	Conductive	60.00 x 20.00 1524 x 508	72.00 1829
A90SMP14	Painted steel	78.00 x 14.00 1981 x 356	90.00 2286
A90SMP14G	Conductive	78.00 x 14.00 1981 x 356	90.00 2286
A90SMP20	Painted steel	78.00 x 20.00 1981 x 508	90.00 2286
A90SMP20G	Conductive	78.00 x 20.00 1981 x 508	90.00 2286

A90SMP14 and A90SMP14G will not fit 18.06-in.deep two-door enclosures (FSD style) if regular panel is also installed.

A90SMP20 and A90SMP20G will not fit 20.12-in. deep enclosures. Will not fit 24.12-in. deep two-door enclosures (FSD style) if regular panel is also installed.

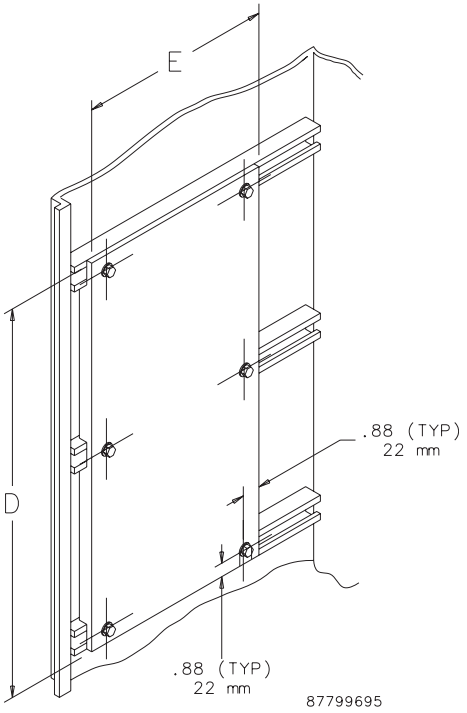

Heavy Duty Panel Supports

Heavy Duty Panel Supports, sold in pairs, are used in place of the panel supports furnished with panels when heavy equipment will be installed on the panels. They extend to the bottom of the enclosure. Adjustable mounting studs allow mounting of different height panels or a combination of panels. Use mounting hardware furnished with panels.

Bulletin: A80

Catalog Number	Fits Enclosure A in./mm	Support Length in./mm
A60FSHDPS	60.00 1524	57.25 1454
A72FSHDPS	72.00 1829	69.25 1759
A90FSHDPS	90.00 2286	87.25 2216

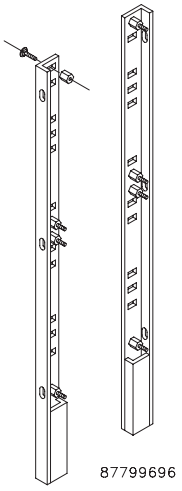

 © 2009-2011 Pentair Technical Products

Panels for Enclosures

Center Panel Supports

Center panel supports are used with Free-Stand Type 12 (Bulletin A30) two-door enclosures. They permit the installation of panels, swing-out panels and rack-mounting angles sized for one-door enclosures. The Center Panel Support can be positioned from front to back of the enclosure.

Bulletin: A80

Standard Product **Panel Supports**

Catalog Number	Fits Enclosure A (in.)	Fits Enclosure A (mm)	G (in.)	G (mm)
A60FSCPS	60.00	1524	23.12	587
A72FSCPS	72.00	1829	29.12	740
A90FSCPS	90.00	2286	38.12	968

Accessory Width with Center Panel Supports

Two Door Enclosure Width (in.)	Two Door Enclosure Width (mm)	Accessory Width (in.)	Accessory Width (mm)
48.00	1219	24.00	610
60.00	1524	30.00	762
72.00	1829	36.00	914

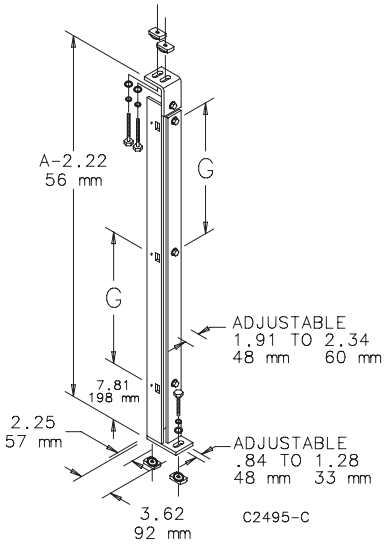

 © 2009-2011 Pentair Technical Products

Panels for Enclosures

Center Panel Supports Enclosure Section Views

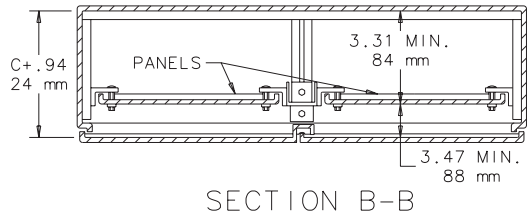

Showing two panels (for one-door enclosures)and center panel support mounted in two-door enclosure.

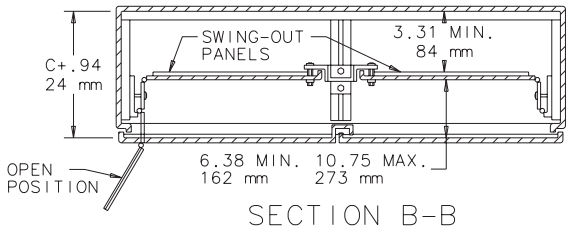

Showing four swing-out panels and center panel support mounted in two-door enclosure.

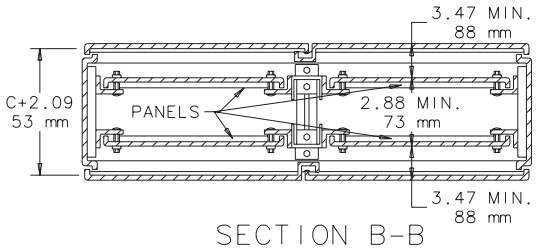

Showing four panels (for one-door enclosures) and two center panel supports mounted in two-door access enclosure.

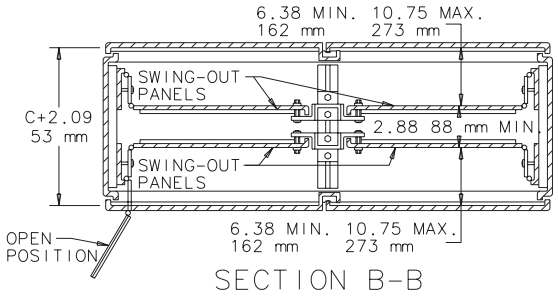

Showing four swing-out panels and two center panel supports mounted in two-door dual access enclosure.

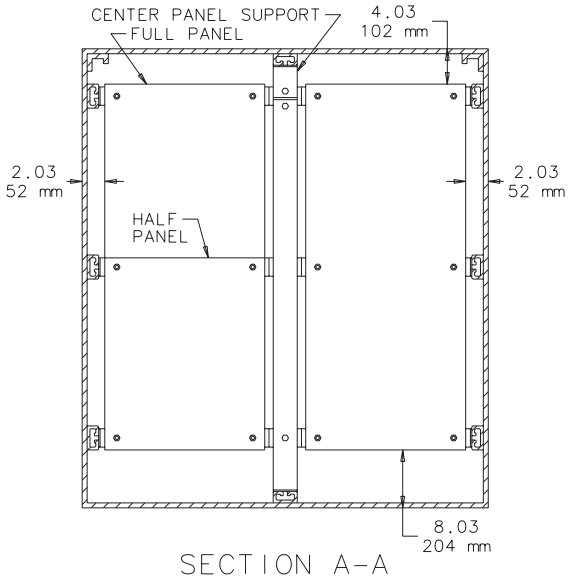

Panels shown are for one-door free-stand enclosures. Half panel fits in top or bottom half of enclosure.

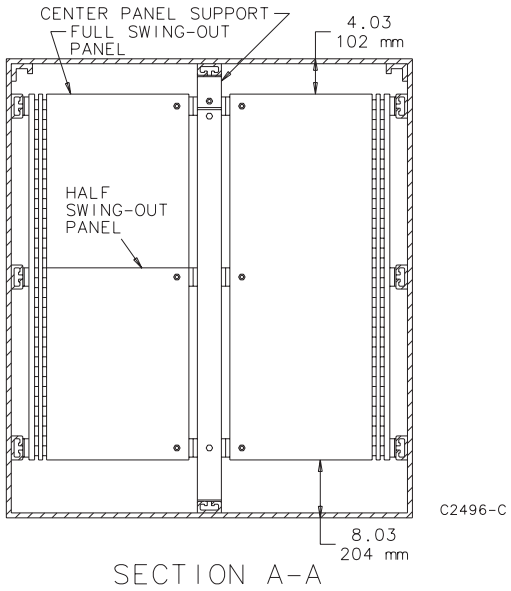

Showing swing-out panels installed in one-door enclosure.

 © 2009-2011 Pentair Technical Products

Swing-Out Panels for Free-Stand Type 4, 4X and 12 Enclosures with Mounting Channel

Panels for Free-Stand Type 12 Enclosures, Free-Stand Type 4 Enclosures and One-Door Type 4X Free-Stand Fiberglass Enclosures. Full-length and half-length swing-out panels are available. Half-length panels can be located in the upper or lower portion of the enclosures. Swing-out panels have a 10 gauge steel support frame and two heavy-gauge continuous hinges which permit the panel to swing completely out of the enclosure if it is located within approximately 10.75 in. (273 mm) of the door. These panels are 12 gauge steel and can be mounted on either side of the enclosure. Panels are finished with white polyester powder paint and furnished with plated mounting hardware.

Bulletin: PNL30

Catalog Number	Description	Panel Size D x E (in.)	Panel Size D x E (mm)	Fits Enclosure A x B (in.)	Fits Enclosure A x B (mm)	Q (in.)	Q (mm)
A72SP24F3	Full Panel	60.00 x 18.81	1524 x 478	72.00 x 24.00	1829 x 610	21.84	555
A72SP24F4	Half Panel	30.88 x 18.81	784 x 478	72.00 x 24.00	1829 x 610	21.84	555
A72SP30F3	Full Panel	60.00 x 24.81	1524 x 630	72.00 x 30.00	1829 x 762	27.84	707
A72SP30F4	Half Panel	30.88 x 24.81	784 x 630	72.00 x 30.00	1829 x 762	27.84	707
A72SP36F3	Full Panel	60.00 x 30.81	1524 x 783	72.00 x 36.00	1829 x 914	33.84	860
A72SP36F4	Half Panel	30.88 x 30.81	784 x 783	72.00 x 36.00	1829 x 914	33.84	860
A90SP36F3	Full Panel	78.00 x 30.81	1981 x 783	90.00 x 36.00	2286 x 914	33.84	860
A90SP36F4	Half Panel	39.88 x 30.81	1013 x 783	90.00 x 36.00	2286 x 914	33.84	860

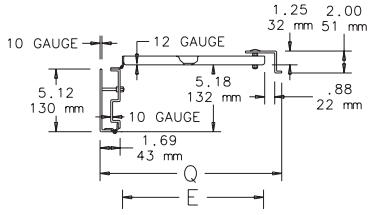

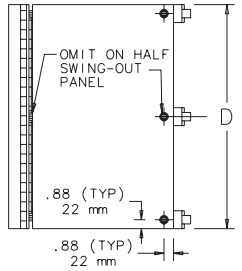

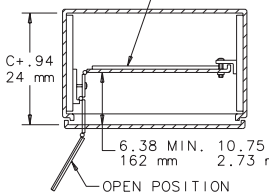

SECTION B-B

Showing swing-out panel mounted in one-door enclosure

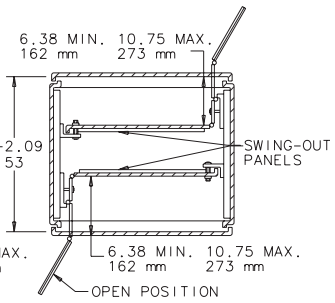

SECTION B-B

Showing two swing-out panels mounted in one-door dual access enclosure

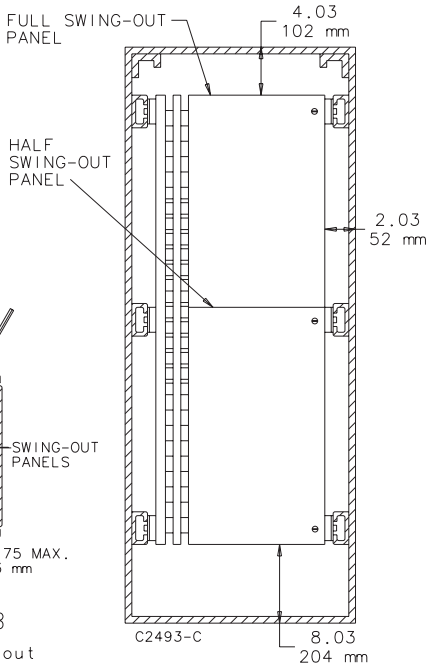

SECTION A-A

Panels for WiFi Cabinets and Small Wall-Mount Enclosures

Panels are available in both steel and wood. Steel panels are 14 gauge steel with a white polyester powder paint finish. Wood panels are 3/4-in. plywood and are unfinished. Wood panels are supplied with Fiberglass Hinged-Cover and POLYPRO® Type 4X WiFi Cabinets.

Bulletin: DWS12, PNLJ, PNLWM

Catalog Number	Material	Panel Size D x E (in.)	Panel Size D x E (mm)	V (in.)	V (mm)
A6P6	Steel	4.88 x 4.88	124 x 124	0.31	8
A6P6WD	Wood	4.88 x 4.88	124 x 124	0.31	8
A16P14	Steel	14.75 x 12.88	375 x 327	0.25	6
A16P14WD	Wood	14.75 x 12.88	375 x 327	0.25	6
A18P16	Steel	16.75 x 14.88	425 x 378	0.25	6
A18P16WD	Wood	16.75 x 14.88	425 x 378	0.25	6

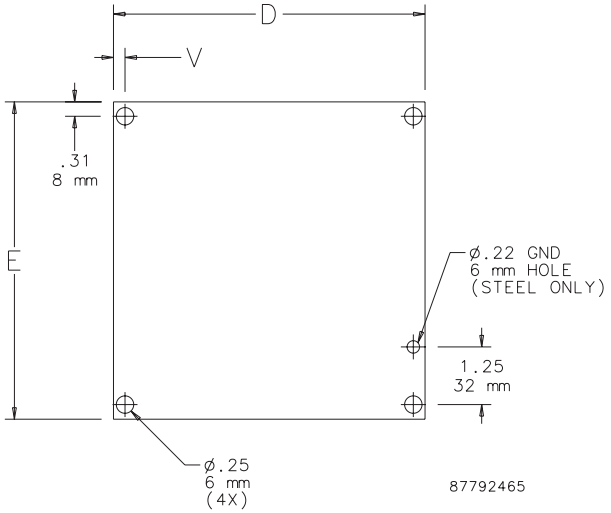

 © 2009-2011 Pentair Technical Products