REV	MCO	DWN	DATE
B	20210634	RAR	12-FEB-07
C	20227811	LS	30-OCT-07

NOTES:

1. INSERT F/N 002 INTO F/N 003 (MAKE SURE THE CONTACT LEGS GO INTO THE CORRECT LOCATION FINS).
2. THE F/N 002 SHOULD FIT OVER THE TWO LOCATION PEGS AND SIT FLAT IN THE F/N 003 (AS SHOWN).
3. ASSEMBLE F/N 001 TO F/N 003 (MAKE SURE THE FOUR LATCHES CLICK INTO PLACE.
4. LOOK INTO THE RJ45 OPENING & MAKE SURE THAT NONE OF THE CONTACTS ARE CROSSED OVER AND SITTING INCORRECTLY.
5. PRINT DATE CODE ON THE LEFT SIDE OF UNIT.
6. PACKAGE FINAL ASSEMBLY INTO F/N 800.
7. PART TO BE UL VERIFIED TO CATEGORY 6 SPECIFICATION TIA/EIA-568-B.2-1. PACKAGING LABEL TO CONTAIN APPROPRIATE MARK. REFERENCE EN-WI-006.
8. PART TO PASS UL1863. PACKAGING LABEL TO CONTAIN APPROPRIATE MARK. REFERENCE EN-WI-006.

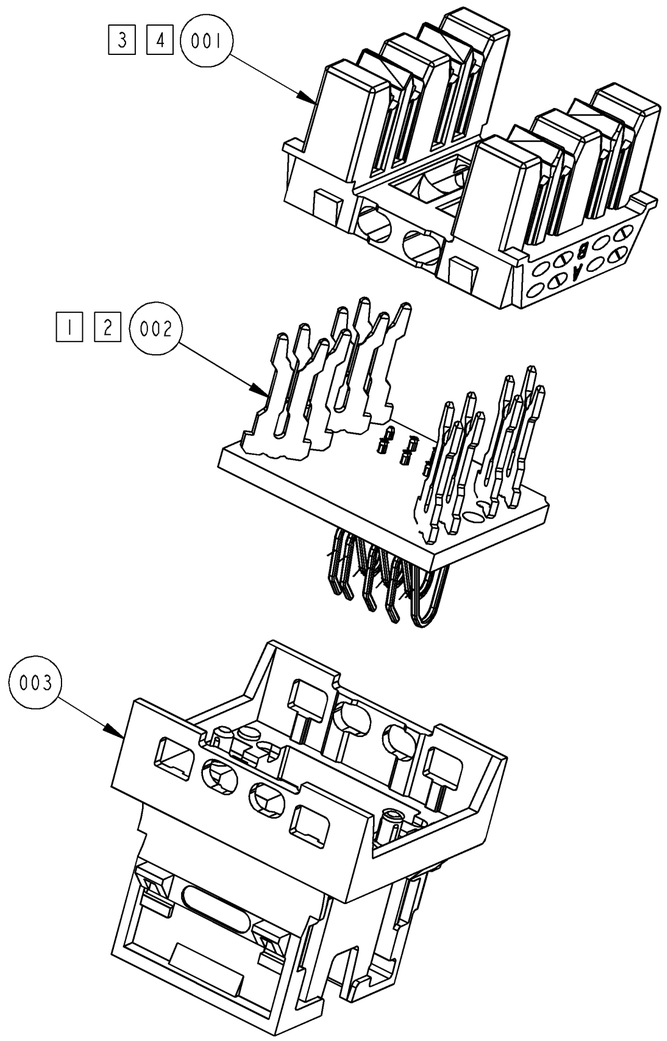

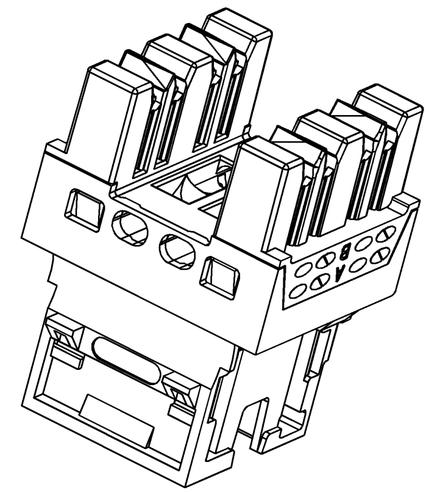

CATALOG NUMBER	PART NUMBER	COLOR	REV
6830 1 830-24	1423887	ELECTRICAL BROWN	A
6830 1 830-22	1356066	ELECTRICAL IVORY	B
6830 1 830-10	1356065	ORANGE	B
6830 1 830-09	1356062	PURPLE	B
6830 1 830-08	1356061	YELLOW	B
6830 1 830-07	1356060	GREEN	B
6830 1 830-06	1356058	BLUE	B
6830 1 830-05	1356056	RED	B
6830 1 830-04	1356053	BLACK	B
6830 1 830-03	1356052	GRAY	B
6830 1 830-02	1356050	IVORY	B
6830 1 830-01	1356049	WHITE	B

INFORMATION ON THIS DOCUMENT IS PROPRIETARY TO ADC AND SHALL NOT BE USED, COPIED, REPRODUCED OR DISCLOSED IN WHOLE OR IN PART WITHOUT WRITTEN CONSENT OF ADC.

TITLE: KM8 JACK ASSEMBLY PUNCH DOWN/CABLE MANAGED VERSION

ALL DIMS AND TOLERANCES ARE INCHES UNLESS OTHERWISE SPECIFIED .XX:±N/A .XXX:±N/A ANGULAR:±N/A

SIZE: C

DRAWING NUMBER: 1356047

REV: C

DO NOT SCALE DRAWING

ENGR: LUIS SANCHEZ

DWN: ERIKA URIOSTEGUI

SHT. 1 OF 1

DIMENSIONS IN INCHES
THIRD ANGLE PROJECTION