THIS DRAWING IS UNPUBLISHED. RELEASED FOR PUBLICATION -,- .
© COPYRIGHT - By - ALL RIGHTS RESERVED.

LOC	DIST
CE	16

REVISIONS

P	LTR	DESCRIPTION	DATE	DWN	APVD
	B1	REVISED PER ECO-11-005139	25MAR11	RK	HMR

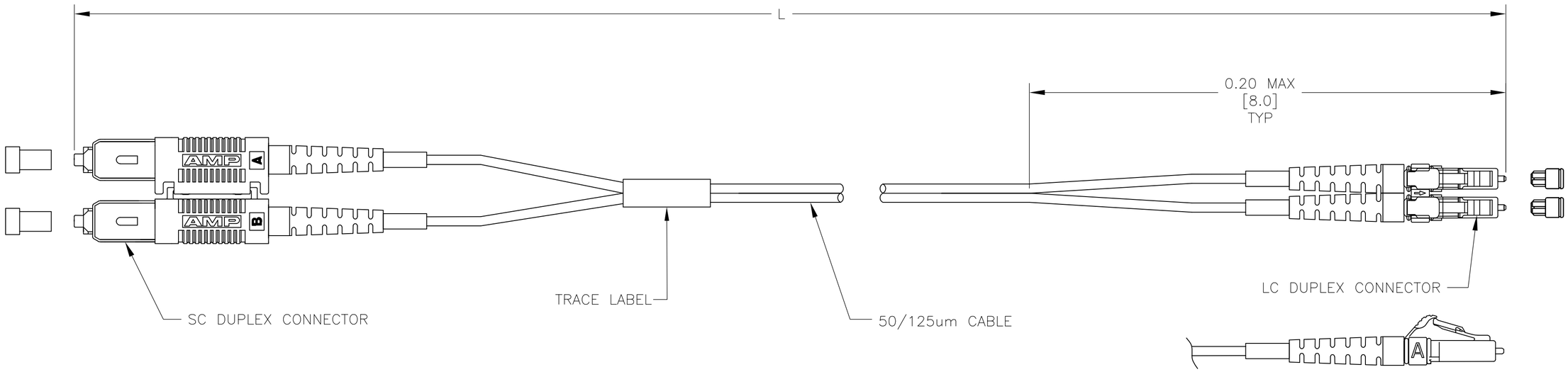

SC CONNECTOR LC CONNECTOR

A ⟷ B

B ⟷ A

SC MAX IL (dB) 1	LC MAX IL (dB) 2	L METERS [INCHES]	PART NUMBER
0.65	0.35	100.00±1.00 [3937.01±39.37]	9-6374613-9
0.59	0.29	60.00±0.60 [2362.0±24.0]	6-6374613-0
0.58	0.28	50.00±0.50 [1968.50±19.69]	5-6374613-0
0.56	0.26	40.00±0.40 [1574.80±15.75]	4-6374613-0
0.54	0.24	31.00±0.30 [1220.0±12.0]	3-6374613-3
0.50	0.20	0.40±0.03 [15.7±1.0]	3-6374613-2
0.50	0.20	1.50±0.05 [59.1±2.0]	3-6374613-1
0.55	0.25	30.00±0.30 [1181±11.8]	3-6374613-0
0.54	0.24	25.00±0.30 [984.3±11.8]	2-6374613-5
0.53	0.23	22.00±0.30 [866.0±12.0]	2-6374613-2
0.53	0.23	20.00±0.30 [787±11.8]	2-6374613-0
0.52	0.22	15.00±0.15 [590.5±6.0]	1-6374613-5
0.52	0.22	13.00±0.15 [511.8±6.0]	1-6374613-3
0.52	0.22	12.00±0.15 [472.4±6.0]	1-6374613-2
0.52	0.22	11.00±0.15 [433.1±6.0]	1-6374613-1
0.52	0.22	10.00±0.15 [393.7±6.0]	1-6374613-0
0.51	0.21	9.00±0.15 [354.3±6.0]	6374613-9
0.51	0.21	8.00±0.15 [315.0±6.0]	6374613-8
0.51	0.21	7.00±.08 [275.6±3.0]	6374613-7
0.51	0.21	6.00±.08 [236.2±3.0]	6374613-6
0.51	0.21	5.00±.08 [196.9±3.0]	6374613-5
0.51	0.21	4.00±.08 [157.5±3.0]	6374613-4
0.50	0.20	3.00±.05 [118.1±2.0]	6374613-3
0.50	0.20	2.00±.05 [78.7±2.0]	6374613-2
0.50	0.20	1.00±.05 [39.4±2.0]	6374613-1

6374613

1. MAXIMUM INSERTION LOSS FOR SC CONNECTOR IS EQUAL TO 0.50dB PLUS CABLE ATTENUATION OF 1.50 dB/KM @ 1300nm.
2. MAXIMUM INSERTION LOSS FOR LC CONNECTOR IS EQUAL TO 0.20dB PLUS CABLE ATTENUATION OF 1.50 dB/KM @ 1300nm.
3. PRODUCT AND PROCESSING MUST MEET REQUIREMENTS OF TE CONNECTIVITY STANDARD 230-702

THIS DRAWING IS A CONTROLLED DOCUMENT.

DIMENSIONS: METERS[INCHES]

TOLERANCES UNLESS OTHERWISE SPECIFIED:
0 PLC ± -
1 PLC ± -
2 PLC ± -
3 PLC ± -
4 PLC ± -
ANGLES ± -

MATERIAL -
FINISH -

DWN C.S.VASU 02 SEP 05
CHK J.DUNCAN 02 SEP 05
APVD J.DUNCAN 02 SEP 05
PRODUCT SPEC —
APPLICATION SPEC —
WEIGHT —

TE Connectivity

NAME CABLE ASSY, FIBER OPTIC, SC - LC DUPLEX 50/125, 2.0 mm

SIZE A2 | CAGE CODE 00779 | DRAWING NO C-6374613 | RESTRICTED TO —

CUSTOMER DRAWING | SCALE NTS | SHEET 1 OF 1 | REV B1