THIS DRAWING IS UNPUBLISHED. RELEASED FOR PUBLICATION 20
© COPYRIGHT 20 BY TYCO ELECTRONICS CORPORATION, ALL RIGHTS RESERVED.

LOC	DIST
CE	00

REVISIONS

P	LTR	DESCRIPTION	DATE	DWN	APVD
	A	RELEASE TO ACTIVE	08JUN2006	BB	LS
	A1	ADD NOTE 2	12MAR2009	BB	SB

1. MATERIAL:
   CONNECTOR ASSEMBLY:
   REAR BODY: ALUMINUM ALLOY
   PLUNGER: ALUMINUM ALLOY
   FERRULE: CERAMIC
   COUPLING NUT: NICKEL PLATED ZINC
   INTERNAL COMPONENTS: RUBBER, COLOR: BLACK
   SPRING: STAINLESS STEEL
   PROTECTIVE COVER: LDPE, COLOR: BLACK, NON-FR
   CRIMP EYELET: NICKEL PLATED COPPER
   POLYMER TUBING: TYGON, COLOR: CLEAR
   HYTREL, COLOR: WHITE
   PVC, COLOR: BLACK
   STRAIN RELIEF: POLYOLEFIN ELASTOMER, COLOR: YELLOW, NON-FR
   BARE BUFFER BOOT: POLYOLEFIN ELASTOMER, COLOR: YELLOW*
   *UL94 V-0 RATED AT QUALIFYING THICKNESS.

2. INSTRUCTION SHEET: 408-9860 AVAILABLE FOR DOWNLOAD AT
   www.tycoelectronics.com/documents OR
   www.ampnetconnect.com/foguide.

3. THIS KIT WILL TERMINATE:
   900um TIGHT BUFFERED FIBER
   250um COATED FIBER
   2.0-3.0mm JACKETED CABLE

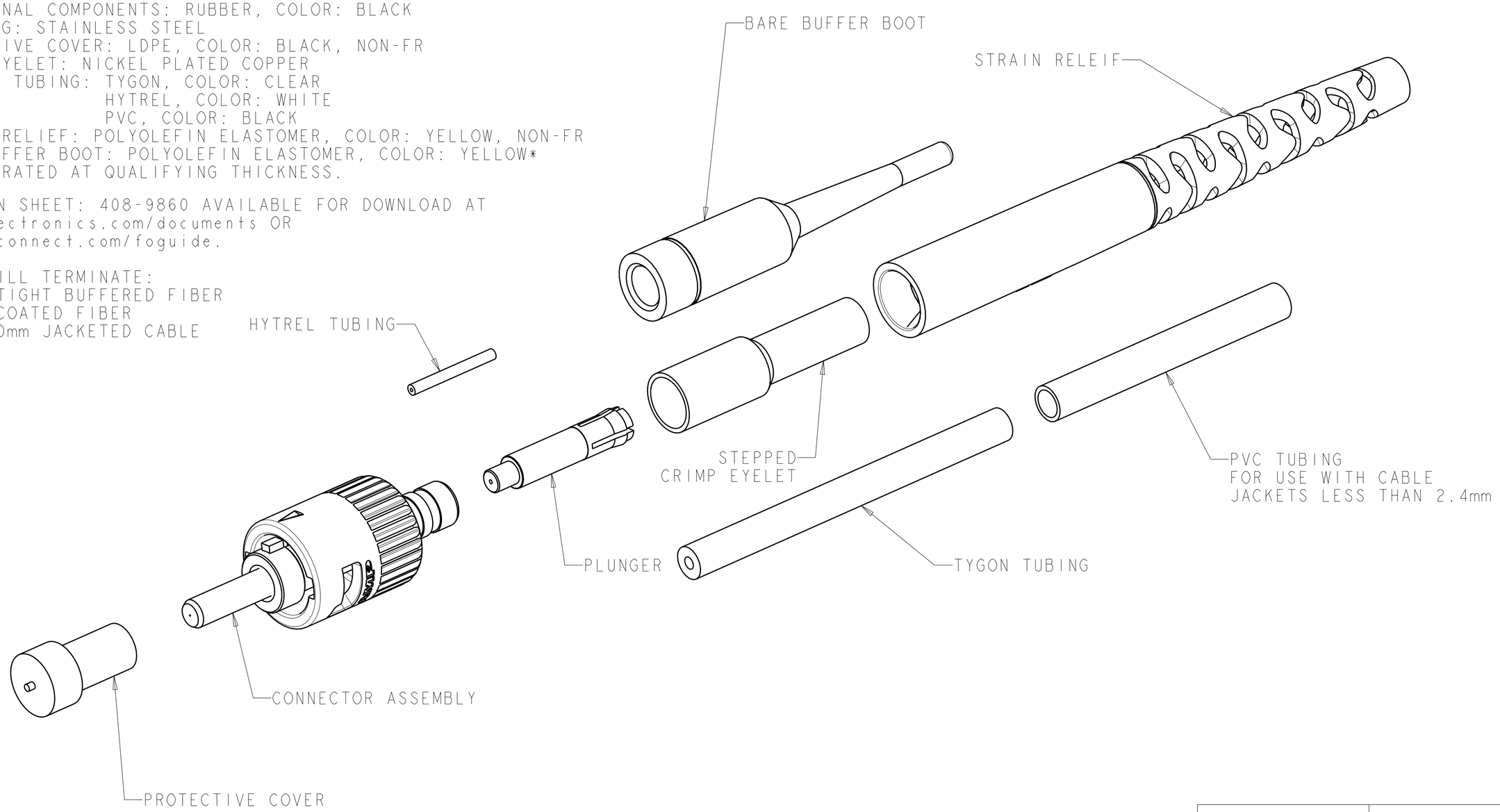

0.8-1.0mm	5504000-1
BUFFER SIZE	PART NUMBER

THIS DRAWING IS A CONTROLLED DOCUMENT FOR TYCO ELECTRONICS CORPORATION. IT IS SUBJECT TO CHANGE AND THE CONTROLLING ENGINEERING ORGANIZATION SHOULD BE CONTACTED FOR THE LATEST REVISION.

DIMENSIONS: mm

TOLERANCES UNLESS OTHERWISE SPECIFIED:
0 PLC ±-
1 PLC ±-
2 PLC ±-
3 PLC ±-
4 PLC ±-
ANGLES ±-

MATERIAL -
FINISH -

DWN B.BRIGGS 02DEC2005
CHK L.SAUERWEIN 02DEC2005
APVD S.BUCHTER 02DEC2005
PRODUCT SPEC -
APPLICATION SPEC -
WEIGHT -

Tyco Electronics
Tyco Electronics
Harrisburg, PA 17105-3608

NAME CONNECTOR KIT, XTC, 125um, CERAMIC, SINGLEMODE
-

SIZE	CAGE CODE	DRAWING NO	RESTRICTED TO
A2	00779	C-5504000	-

CUSTOMER DRAWING | SCALE 5:1 | SHEET 1 OF 1 | REV A1

AMP 1471-9 REV 31MAR2000

Pro/ENGINEER DRAWING