THIS DRAWING IS UNPUBLISHED. RELEASED FOR PUBLICATION -,- .
© COPYRIGHT - By - ALL RIGHTS RESERVED.

LOC	DIST
G	14

REVISIONS

P	LTR	DESCRIPTION	DATE	DWN	APVD
	R1	REVISED PER ECO-11-004587	11MAR11	RK	HMR

AMP WIRE RANGE	Listed	LR7189 Certified
22-16 AWG SOLID OR STRANDED	22-16 AWG SOLID OR STRANDED	22-16 AWG SOLID OR STRANDED

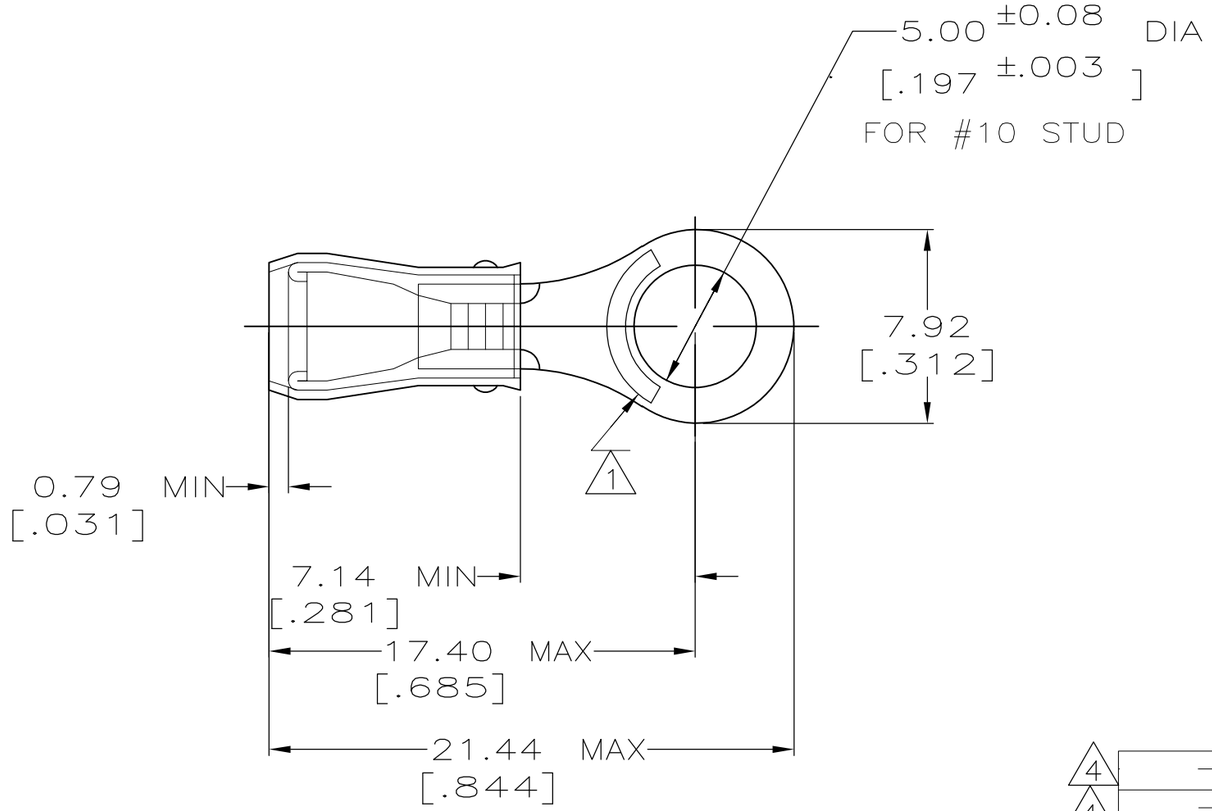

1 STAMP AMP 22-18* APPROX AS SHOWN
22-16 TERMINALS ARE STAMPED 22-18 IN ACCORDANCE WITH MILITARY SPEC MIL-T-7928
COMMERCIAL WIRE RANGE IS 22-16

2 WIRE INSUL DIA, 2.67-3.56 [.105-.140]

3 TONGUE MATERIAL THK, 0.79±0.05 [.031 ±.002]

4 SUPERSEEDED BY 8-36154-5

MILITARY P/N AND CLASS	QUANTITY	PACKAGE TYPE	PART NO
~~- -~~	~~25~~	~~LOOSE PIECE,BLS~~	~~9-36154-4~~
~~- -~~	~~5~~	~~LOOSE PIECE,BLS~~	~~8-36154-4~~
- -	50	LOOSE PIECE, BAG	8-36154-5
- -	100	LOOSE PIECE, BOX	8-36154-1
MS 25036-103 CLASS 2	5000	ON TAPE, REEL	2-36154-2
MS 25036-103 CLASS 1 & 2	1000	LOOSE PIECE	36154

AMP INCORPORATED
CUSTOMER SERVICE SYSTEMS

FOR ADDITIONAL PRODUCT INFORMATION OR COPIES OF DRAWINGS AND TECHNICAL DOCUMENTS	PRODUCT INFORMATION CENTER 1-800-522-6752
FOR APPLICATION TOOLING INFORMATION	TOOLING ASSISTANCE CENTER 1-800-722-1111
FOR ORDER ENTRY	1-800-526-5142

MAX RECOMMENDED OPERATING TEMPERATURE: 105°C [221°F]

VOLTAGE RATING: 300 V MAX

WIRE CROSS SECTIONAL AREA RANGE: 0.26-1.65mm² [509-3,260] CIR MILS

THIS DRAWING IS A CONTROLLED DOCUMENT.

DIMENSIONS: MM[INCHES]

TOLERANCES UNLESS OTHERWISE SPECIFIED:

0 PLC	± -
1 PLC	± -
2 PLC	± 0.20[.008]
3 PLC	± -
4 PLC	± -
ANGLES	± -

MATERIAL: COPPER ASTM B-152 SLEEVE RED NYLON

FINISH: TIN PLATE PER ASTM B 545

DWN	DK SCHRUM	02/16/93
CHK	RE HERSEY	4/28/93
APVD	ML ELLIS	4/28/93

PRODUCT SPEC: UL 486A

APPLICATION SPEC: NOT AVAILABLE

WEIGHT: -

CUSTOMER DRAWING

TE Connectivity

NAME: TERMINAL, RING TONGUE, PIDG™, WIRE SIZE : 22-16 AWG

SIZE	CAGE CODE	DRAWING NO	RESTRICTED TO
A3	00779	C-36154	-

SCALE	SHEET	REV
4:1	1 OF 1	R1