THIS DRAWING IS UNPUBLISHED. RELEASED FOR PUBLICATION -,- .
© COPYRIGHT - BY TYCO ELECTRONICS CORPORATION. ALL INTERNATIONAL RIGHTS RESERVED.

LOC	DIST
G	14

REVISIONS

P	LTR	DESCRIPTION	DATE	DWN	APVD
	G1	REDRAWN PER ECO-09-005960	14APR09	HMR	JR

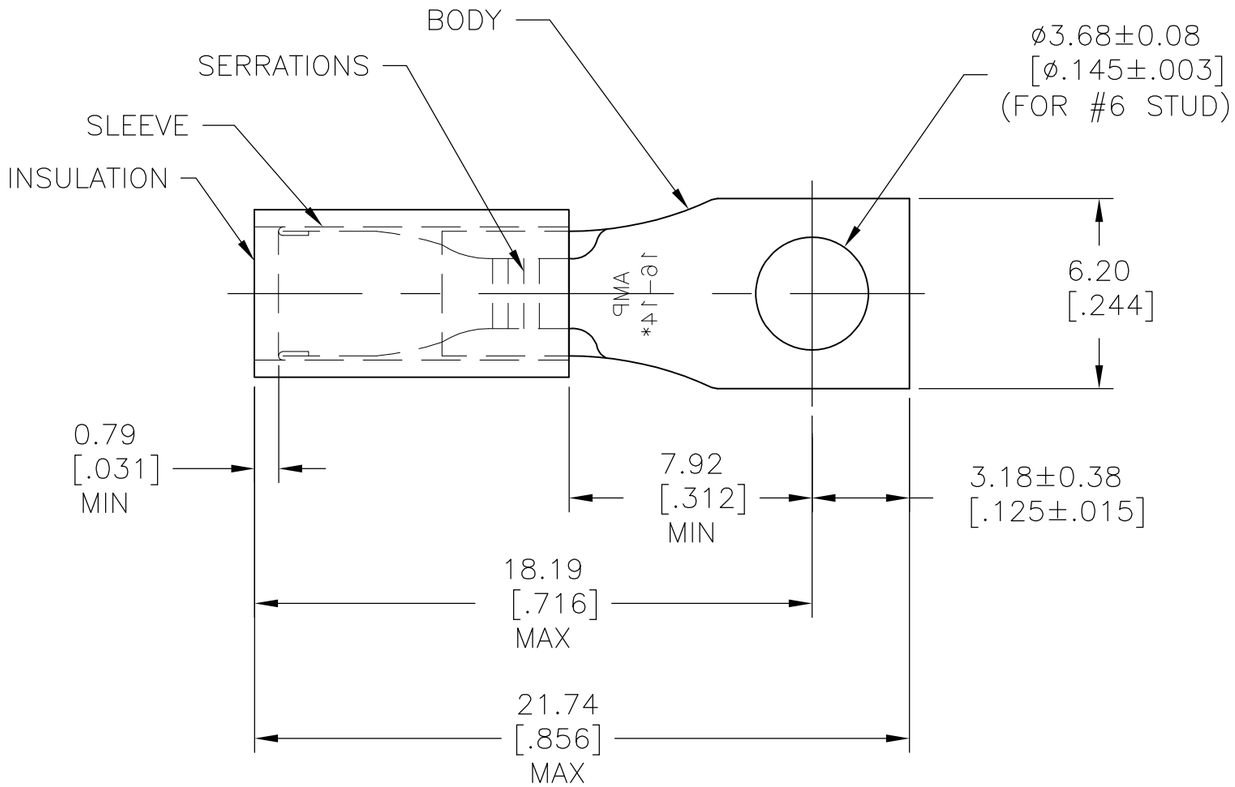

TONGUE MATERIAL THK = 0.79±0.05[.031±.002]
FOR 2.92[.115] TO 4.32[.170] WIRE INS. DIA

	QTY	DESCRIPTION	PART NO	MATERIAL & FINISH
	100	LOOSE PC, BOX	8-33173-1	INSULATION: NYLON COLOR: BLUE SLEEVE: COPPER (ASTM-B152) BODY: COPPER (ASTM-B152) TIN PL (ASTM-B545)
OBSOLETE	~~1~~	~~33173 ON TAPE~~	~~2-33173-1~~	
	1	WIRE TERMINAL	33173	

THIS DRAWING IS A CONTROLLED DOCUMENT.

DIMENSIONS: mm [INCHES]

TOLERANCES UNLESS OTHERWISE SPECIFIED:

0 PLC	± -
1 PLC	± -
2 PLC	± -
3 PLC	± 0.20[.008]
4 PLC	± -
ANGLES	± 5°

MATERIAL: SEE TABLE

FINISH: SEE TABLE

DWN RAGHAVENDRA 14APR09
CHK JEFF RUTH 14APR09
APVD Tom Michielutti 14APR09
PRODUCT SPEC —
APPLICATION SPEC —
WEIGHT —

Tyco Electronics
Tyco Electronics Corporation
Harrisburg, PA 17105-3608

NAME
WIRE TERMINAL
P.I.D.G.-RECTANGULAR TONGUE
WIRE SIZE: 16-14

SIZE	CAGE CODE	DRAWING NO	RESTRICTED TO
A3	00779	C-33173	—

CUSTOMER DRAWING

SCALE	SHEET	REV
5:1	1 OF 1	G1