THIS DRAWING IS UNPUBLISHED. RELEASED FOR PUBLICATION 20
© COPYRIGHT 20 BY TYCO ELECTRONICS CORPORATION. ALL RIGHTS RESERVED.

LOC	DIST
HM	00

REVISIONS

P	LTR	DESCRIPTION	DATE	DWN	APVD
	A	RLSD; ECO-10-002954	09FEB2010	GG	RA

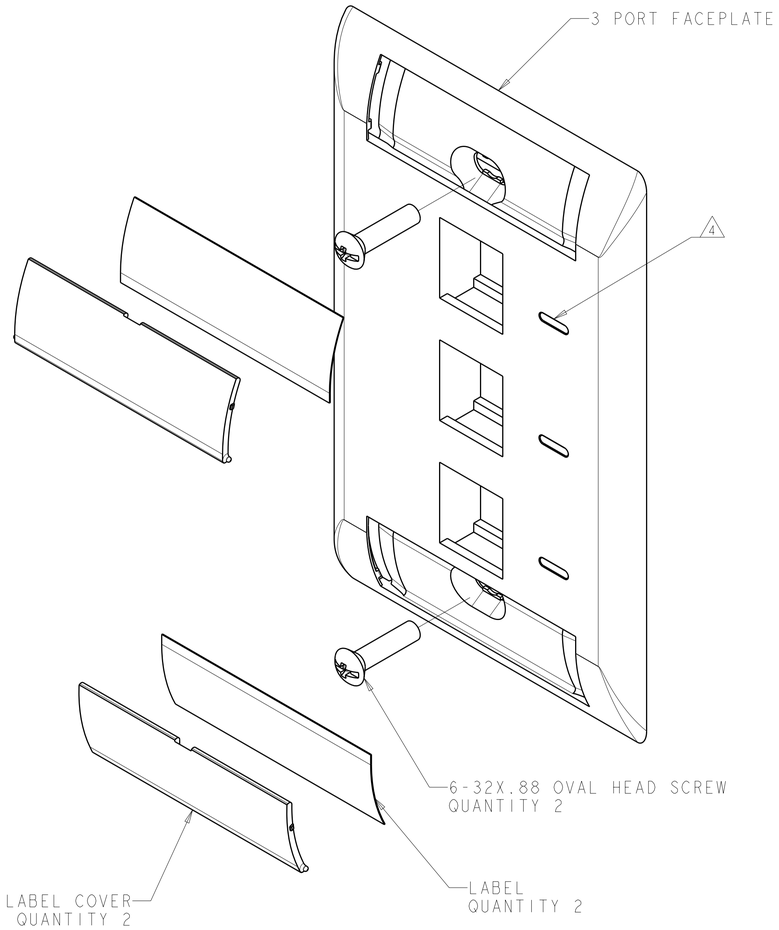

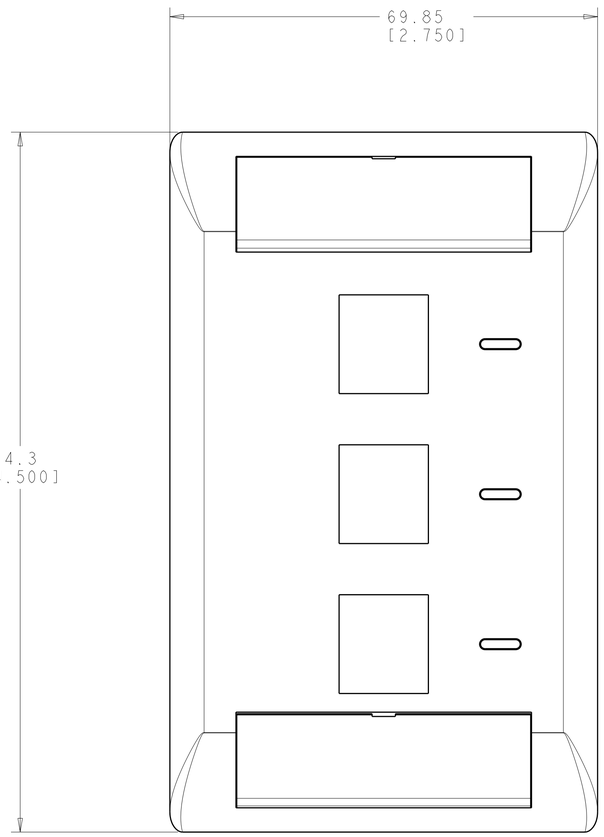

1. DIMENSIONS ARE NOMINAL UNLESS OTHERWISE SPECIFIED.

2. MATERIAL:
FACEPLATE - POLYCARBONATE MOLDING COMPOUND. SEE TABLE FOR COLORS.

SCREWS - ZINC PLATED CARBON STEEL.

LABEL COVER - POLYCARBONATE MOLDING COMPOUND, CLEAR.

LABEL - WHITE INDEX PAPER.

3. THIS KIT SHIPPED NOT ASSEMBLED.

4. MOLD OVER ICON FEATURE.

COLOR	PART NUMBER
ALPINE WHITE	1-2111010-3
ELECTRIC IVORY	1-2111010-1
NEMA GRAY	2111010-4
WHITE	2111010-3
BLACK	2111010-2
LIGHT ALMOND	2111010-1

THIS DRAWING IS A CONTROLLED DOCUMENT FOR TYCO ELECTRONICS CORPORATION. IT IS SUBJECT TO CHANGE AND THE CONTROLLING ENGINEERING ORGANIZATION SHOULD BE CONTACTED FOR THE LATEST REVISION.

DIMENSIONS: MM[INCHES]

TOLERANCES UNLESS OTHERWISE SPECIFIED:
0 PLC ±-
1 PLC ±-
2 PLC ±-
3 PLC ±-
4 PLC ±-
ANGLES ±-

MATERIAL - 2

FINISH - 2

DWN G. GARRETT 31MAR2009
CHK R. ASHBY 31MAR2009
APVD R. ASHBY 31MAR2009

PRODUCT SPEC -
APPLICATION SPEC -
WEIGHT -

Tyco Electronics
Tyco Electronics
Harrisburg, PA 17105-3608

NAME KIT, FACEPLATE, COMMERCIAL, SINGLE GANG, 3 PORT

SIZE	CAGE CODE	DRAWING NO	RESTRICTED TO
A	00779	C-2111010	-

CUSTOMER DRAWING | SCALE 2:1 | SHEET 1 OF 1 | REV A

AMP 4805 REV 31MAR2000

Pro/ENGINEER DRAWING