THIS DRAWING IS UNPUBLISHED. RELEASED FOR PUBLICATION -,- .
© COPYRIGHT - BY TYCO ELECTRONICS CORPORATION. ALL RIGHTS RESERVED.

| LOC | DIST |
|---|---|
| ES | 00 |

REVISIONS

| P | LTR | DESCRIPTION | DATE | DWN | APVD |
|---|---|---|---|---|---|
| | A | ECR-09-010375 | 08MAY09 | JG | RC |

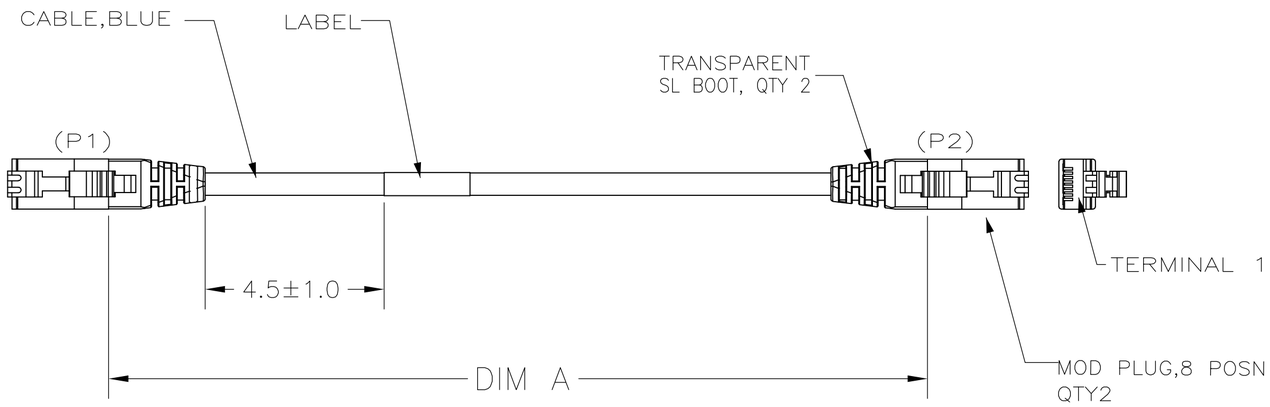


1. ONE CABLE ASSEMBLY PACKAGED IN A POLY BAG.
2. CABLE: UNSHIELDED, 24AWG, 4 TWISTED PAIRS 7/32 STRANDED CONDUCTORS, 100 OHMS.
3. DIMENSIONS ARE MAXIMUM UNLESS OTHERWISE SPECIFIED.
4. DESIGNATIONS IN PARENTHESES ( ) ARE FOR REFERENCE ONLY.
5. WIRES TO BE LACED IN MOD PLUG PER COLOR CODE IN WIRING DIAGRAM. FINAL ASSEMBLY WILL BE T568A.

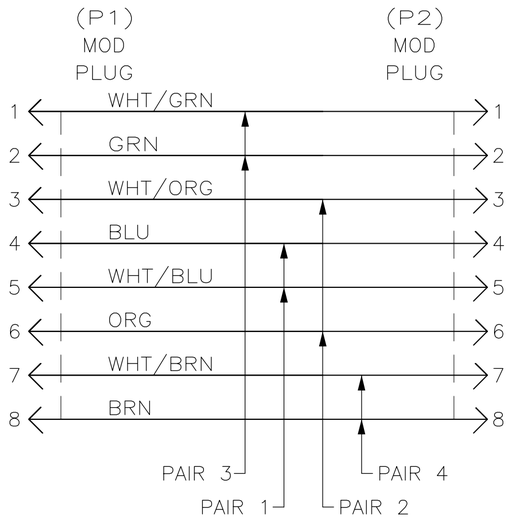


WIRING DIAGRAM 5
T568A

| FEET,REF | DIM A | PART NO |
|---|---|---|
| 100 | 1206 | 9-1859239-9 |
| 95 | 1146 | 9-1859239-5 |
| 90 | 1086 | 9-1859239-0 |
| 85 | 1026 | 8-1859239-5 |
| 80 | 966 | 8-1859239-0 |
| 75 | 906 | 7-1859239-5 |
| 70 | 846 | 7-1859239-0 |
| 65 | 786 | 6-1859239-5 |
| 60 | 726 | 6-1859239-0 |
| 55 | 666 | 5-1859239-5 |
| 50 | 606 | 5-1859239-0 |
| 45 | 546 | 4-1859239-5 |
| 40 | 486 | 4-1859239-0 |
| 35 | 426 | 3-1859239-5 |
| 30 | 366 | 3-1859239-0 |
| 25 | 304 | 2-1859239-5 |
| 20 | 244 | 2-1859239-0 |
| 16 | 196 | 1-1859239-6 |
| 15 | 184 | 1-1859239-5 |
| 14 | 172 | 1-1859239-4 |
| 12 | 148 | 1-1859239-2 |
| 10 | 124 | 1-1859239-0 |
| 9 | 110 | 1859239-9 |
| 8 | 98 | 1859239-8 |
| 7 | 86 | 1859239-7 |
| 6 | 74 | 1859239-6 |
| 5 | 62 | 1859239-5 |
| 4 | 50 | 1859239-4 |
| 3 | 38 | 1859239-3 |
| 2 | 26 | 1859239-2 |
| 1 | 14 | 1859239-1 |

1859239

THIS DRAWING IS A CONTROLLED DOCUMENT.

DIMENSIONS: INCHES

TOLERANCES UNLESS OTHERWISE SPECIFIED:
0 PLC ± -
1 PLC ± -
2 PLC ± -
3 PLC ± -
4 PLC ± -
ANGLES ± -

MATERIAL -
FINISH -

DWN JENNY GU 08MAY2009
CHK RICKY CHEN 08MAY2009
APVD RICKY CHEN 08MAY2009
PRODUCT SPEC —
APPLICATION SPEC —
WEIGHT —

Tyco Electronics
Tyco Electronics Corporation
Shanghai, China

NAME
CABLE ASSY, CAT5E, MOD PLUG, 8 POSN, BLUE, TRANSPARENT SL BOOT
—

| SIZE | CAGE CODE | DRAWING NO | RESTRICTED TO |
|---|---|---|---|
| A2 | 00779 | C-1859239 | — |

CUSTOMER DRAWING | SCALE — | SHEET 1 OF 1 | REV B