THIS DRAWING IS UNPUBLISHED. RELEASED FOR PUBLICATION 20
© COPYRIGHT 20 BY - ALL RIGHTS RESERVED.

| LOC | DIST |
|---|---|
| HM | 00 |

REVISIONS

| P | LTR | DESCRIPTION | DATE | DWN | APVD |
|---|---|---|---|---|---|
| | J | REV; ECO-11-019781 | 06OCT2011 | JB | SA |
| | K | REV; ECO-11-021538 | 27OCT2011 | GG | SA |

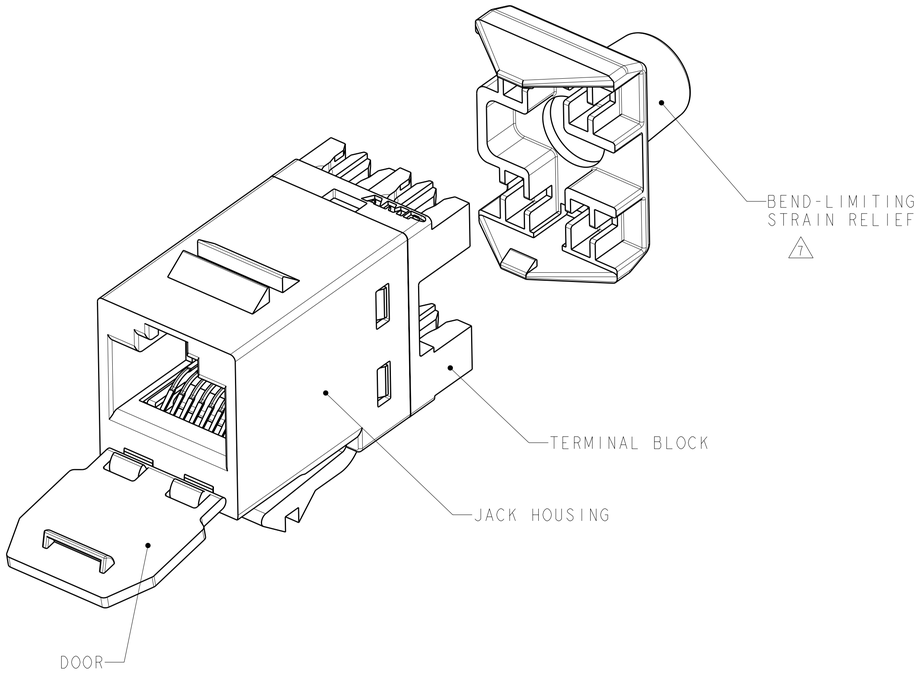


1. MATERIAL: JACK HOUSING - POLYCARBONATE, 94V-0 RATED.
110 BLOCK, STRAIN RELIEF AND DOOR - POLYCARBONATE.
ARRAY TRAY - PBT POLYESTER.
JACK CONTACTS ARRAY - BERYLLIUM COPPER, PLATED WITH 1.27µm [.000050] MINIMUM THICK GOLD IN LOCALIZED AREA AND 3.81µm [.000150] MINIMUM THICK MATTE TIN IN BOARD INTERFACE AREA OVER 1.27µm [.000050] MINIMUM THICK NICKEL UNDERPLATE.
IDC TERMINALS - PHOSPHOROUS BRONZE, PLATED WITH 3.81µm [.00015] MINIMUM THICK MATTE TIN OVER 1.27µm [.00005] MINIMUM THICK NICKEL UNDERPLATE.

2. SL 110 JACK WILL TERMINATE 22-24 AWG SOLID AND 24-26 AWG STRANDED CONDUCTORS, 1.27[.050] MAXIMUM INSULATION DIAMETER. JACK WILL ACCEPT CONDUCTORS UP TO 1.45 [.057] BUT REQUIRE THE USE OF A STRAIN RELIEF.

3. CAVITY CONFORMS TO FCC RULES AND REGULATIONS) PART 68 SUBPART F REQUIREMENTS.

4. MOUNTING PANEL THICKNESS 1.47 - 1.60 [.058 - .063].

5. THESE TWO SUGGESTED CUTOUT OPENINGS ARE USED IN TANDEM WITH DUAL FRONT AND BACK CUTOUTS.

6. ONE MODULAR JACK ASSEMBLY PER POLYBAG.

7. USE OF STRAIN RELIEF IS OPTIONAL.

8. REFER TO 408-8858 FOR TERMINATION INSTRUCTIONS USING SL SERIES TOOL TERMINATION. REFER TO 408-8417 FOR TERMINATION INSTRUCTIONS USING 110 PUNCH DOWN TOOL.

9. TWENTY-FIVE MODULAR JACKS PER POLYBAG.

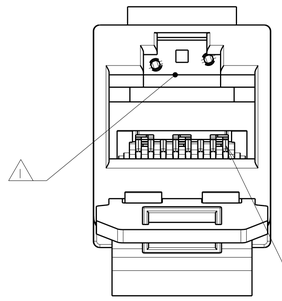


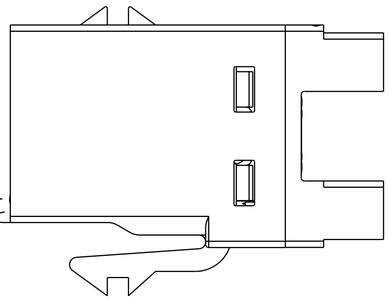

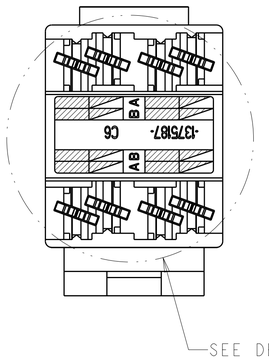


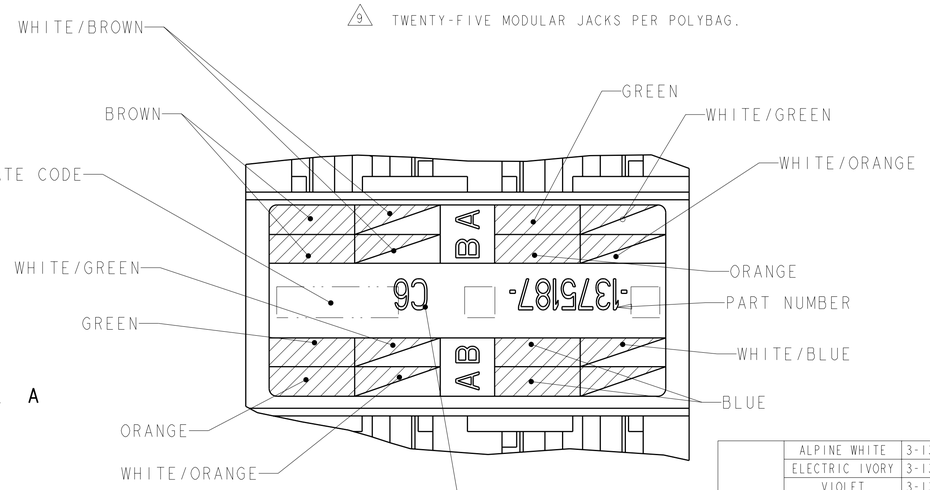


DETAIL A
SCALE 10:1

| | | |
|---|---|---|
| 9 | ALPINE WHITE | 3-1375187-3 |
| | ELECTRIC IVORY | 3-1375187-1 |
| | VIOLET | 3-1375187-0 |
| | GREEN | 2-1375187-9 |
| | YELLOW | 2-1375187-8 |
| | RED | 2-1375187-7 |
| | BLUE | 2-1375187-6 |
| | ORANGE | 2-1375187-5 |
| | NEMA GRAY | 2-1375187-4 |
| | WHITE | 2-1375187-3 |
| | BLACK | 2-1375187-2 |
| | LIGHT ALMOND | 2-1375187-1 |
| 6 | ALPINE WHITE | 1-1375187-3 |
| | ELECTRIC IVORY | 1-1375187-1 |
| | VIOLET | 1-1375187-0 |
| | GREEN | 1375187-9 |
| | YELLOW | 1375187-8 |
| | RED | 1375187-7 |
| | BLUE | 1375187-6 |
| | ORANGE | 1375187-5 |
| | NEMA GRAY | 1375187-4 |
| | WHITE | 1375187-3 |
| | BLACK | 1375187-2 |
| | LIGHT ALMOND | 1375187-1 |
| PACKAGE | HOUSING COLOR | PART NUMBER |

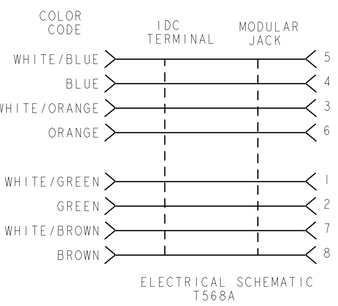


ELECTRICAL SCHEMATIC
T568A

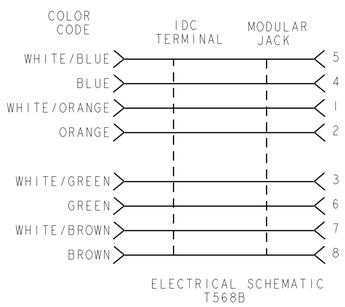


ELECTRICAL SCHEMATIC
T568B

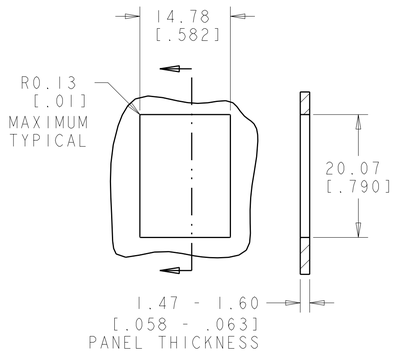


SINGLE PANEL CUTOUT

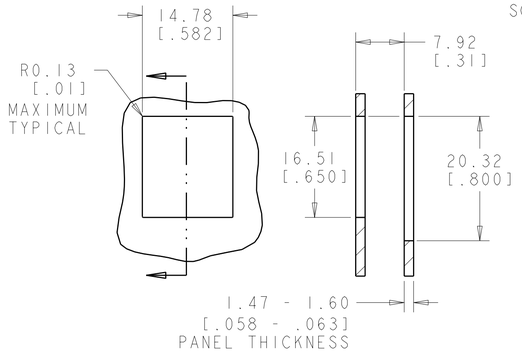


SUGGESTED FLUSH MOUNT
PANEL APPLICATION CUTOUT

THIS DRAWING IS A CONTROLLED DOCUMENT.

DIMENSIONS: MM[INCHES]

TOLERANCES UNLESS OTHERWISE SPECIFIED:
0 PLC ±
1 PLC ±
2 PLC ±
3 PLC ±
4 PLC ±
ANGLES ±

MATERIAL -
FINISH -

| | | |
|---|---|---|
| DWN | T PITTS | 05NOV01 |
| CHK | I SMITH | 08NOV01 |
| APVD | C DOOLEY | 08NOV01 |
| PRODUCT SPEC | 108-1990 - 108-1990-3 | |
| APPLICATION SPEC | - (8) | |
| WEIGHT | - | |

TE Connectivity

NAME ASSEMBLY, SL 110 JACK, CAT 6 DUST COVER -

| SIZE | CAGE CODE | DRAWING NO | RESTRICTED TO |
|---|---|---|---|
| A1 | 00779 | C-1375187 | - |

CUSTOMER DRAWING | SCALE 4:1 | SHEET 1 OF 1 | REV K

4805 (3/11)

Pro/ENGINEER DRAWING