THIS DRAWING IS UNPUBLISHED. RELEASED FOR PUBLICATION 20
© COPYRIGHT 20 - ALL RIGHTS RESERVED.

LOC	DIST
HM	00

REVISIONS

P	LTR	DESCRIPTION	DATE	DWN	APVD
	M1	REVISED PER ECO-11-005033	09MAY2011	RK	HMR
	N	REV; ECO-11-021538	27OCT2011	GG	SA

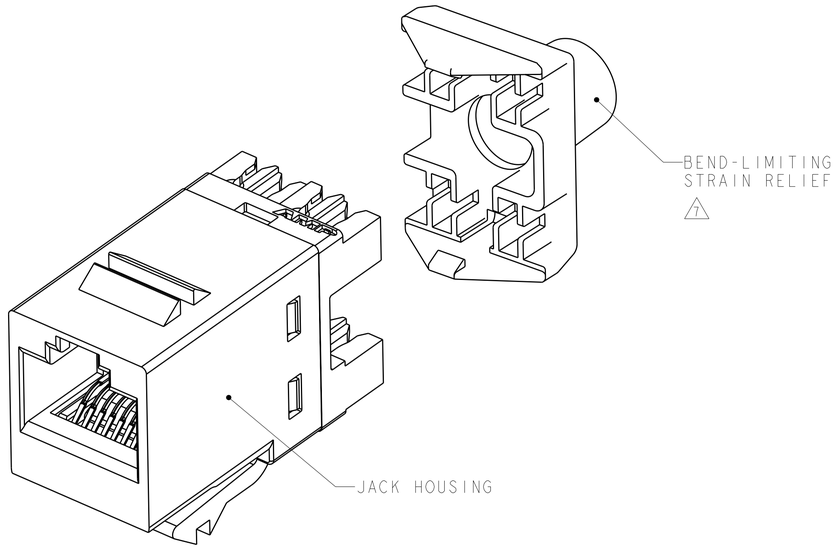

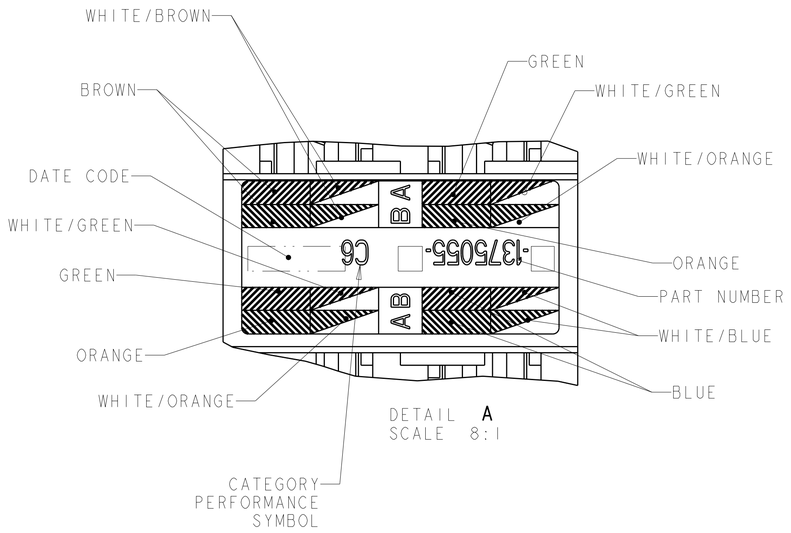

DETAIL A
SCALE 8:1

1. MATERIAL: JACK HOUSING - POLYCARBONATE, 94V-0 RATED.
   110 BLOCK AND BEND LIMITING STRAIN RELIEF - POLYCARBONATE.
   ARRAY TRAY - PBT POLYESTER.
   JACK CONTACTS ARRAY - BERYLLIUM COPPER, PLATED WITH 1.27µm [.000050] MINIMUM THICK GOLD IN LOCALIZED AREA AND 3.81µm [.000150] MINIMUM THICK MATTE TIN IN BOARD INTERFACE AREA OVER 1.27µm [.000050] MINIMUM THICK NICKEL UNDERPLATE.
   IDC TERMINALS - PHOSPHOROUS BRONZE, PLATED WITH 3.81µm [.00015] MINIMUM THICK MATTE TIN OVER 1.27µm [.00005] MINIMUM THICK NICKEL UNDERPLATE.
2. SL 110 JACK WILL TERMINATE 22-24 AWG SOLID AND 24-26 AWG STRANDED CONDUCTORS, 1.27[.050] MAXIMUM INSULATION DIAMETER. JACK WILL ACCEPT CONDUCTORS UP TO 1.45 [.057] BUT REQUIRE THE USE OF A STRAIN RELIEF.
3. CAVITY CONFORMS TO FCC RULES AND REGULATIONS) PART 68 SUBPART F REQUIREMENTS.
4. MOUNTING PANEL THICKNESS 1.47 - 1.60 [.058 - .063].
5. THESE TWO SUGGESTED CUTOUT OPENINGS ARE USED IN TANDEM WITH DUAL FRONT AND BACK CUTOUTS.
6. ONE MODULAR JACK ASSEMBLY PER POLYBAG.
7. USE IS OPTIONAL.
8. TWENTY FIVE MODULAR JACKS PER POLYBAG.
9. REFER TO 408-8858 FOR TERMINATION INSTRUCTIONS USING SL SERIES TOOL TERMINATION. REFER TO 408-8417 FOR TERMINATION INSTRUCTIONS USING 110 PUNCH DOWN TOOL.

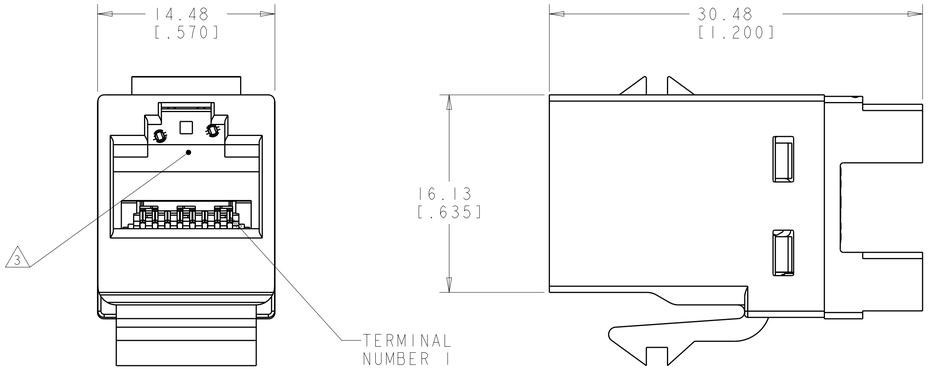

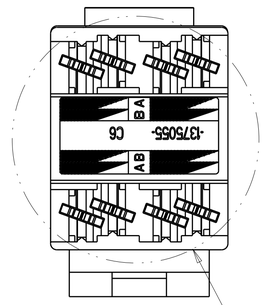

8	ALPINE WHITE	3-1375055-3
	ELECTRIC IVORY	3-1375055-1
	VIOLET	3-1375055-0
	GREEN	2-1375055-9
	YELLOW	2-1375055-8
	RED	2-1375055-7
	BLUE	2-1375055-6
	ORANGE	2-1375055-5
	NEMA GRAY	2-1375055-4
	WHITE	2-1375055-3
	BLACK	2-1375055-2
	LIGHT ALMOND	2-1375055-1
6	ALPINE WHITE	1-1375055-3
	ELECTRIC IVORY	1-1375055-1
	VIOLET	1-1375055-0
	GREEN	1375055-9
	YELLOW	1375055-8
	RED	1375055-7
	BLUE	1375055-6
	ORANGE	1375055-5
	NEMA GRAY	1375055-4
	WHITE	1375055-3
	BLACK	1375055-2
	LIGHT ALMOND	1375055-1
PACKAGE	HOUSING COLOR	PART NUMBER

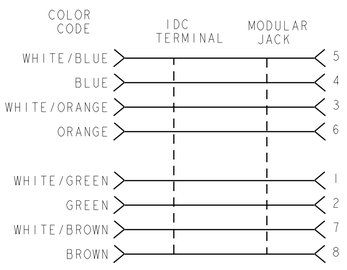

ELECTRICAL SCHEMATIC
T568A

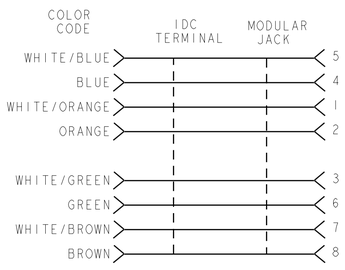

ELECTRICAL SCHEMATIC
T568B

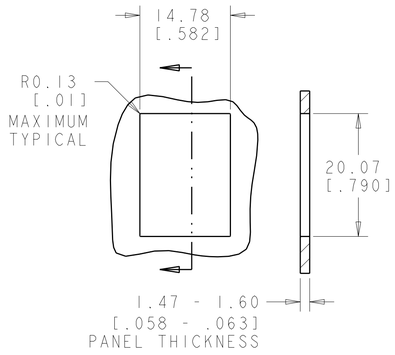

SINGLE PANEL CUTOUT

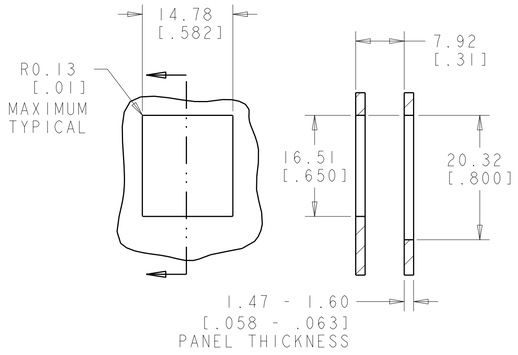

SUGGESTED FLUSH MOUNT
PANEL APPLICATION CUTOUT

THIS DRAWING IS A CONTROLLED DOCUMENT.

DIMENSIONS: MM[Inches]

TOLERANCES UNLESS OTHERWISE SPECIFIED:
0 PLC ±-
1 PLC ±-
2 PLC ±-
3 PLC ±-
4 PLC ±-
ANGLES ±-

MATERIAL -
FINISH -

DWN	T. PITTS	18OCT2001
CHK	L. SMITH	13MAR2001
APVD	B. TRIPPE	13MAR2001
PRODUCT SPEC	- 108-1990 - 108-1990-3	
APPLICATION SPEC	- 9	
WEIGHT	-	

TE Connectivity

NAME: ASSEMBLY, SL 110 JACK, CAT 6

SIZE	CAGE CODE	DRAWING NO	RESTRICTED TO
A1	00779	C-1375055	-

CUSTOMER DRAWING

SCALE	SHEET	OF	REV
6:1	1	1	N