THIS DRAWING IS UNPUBLISHED. RELEASED FOR PUBLICATION ,19 .
© COPYRIGHT 19 BY AMP INCORPORATED. ALL RIGHTS RESERVED.

LOC	DIST
AA	27

REVISIONS

P	LTR	DESCRIPTION	DATE	DWN	APVD
	0	RLSD; NPR C99–117	15JUL99	GG	GB

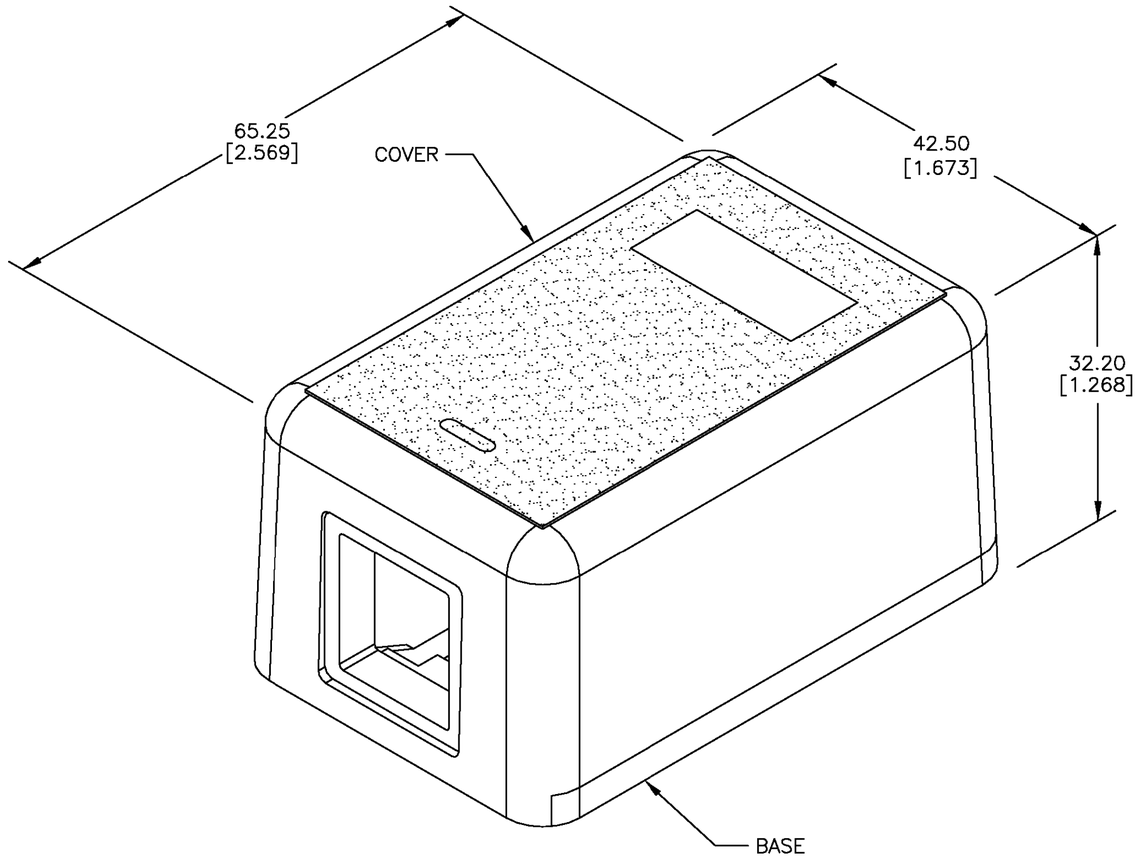

1. MATERIAL: BASE AND COVER – ABS MOLDING COMPOUND UL94V–0. SEE TABLE FOR COLOR.
   CABLE TIE – NYLON
   SCREWS – ZINC PLATED CARBON STEEL.
2. PACKAGED 1 KIT PER POLYBAG.
3. ALL DIMENSIONS SHOWN ARE MAXIMUM.

DOUBLE SIDED FOAM TAPE
QUANTITY 1

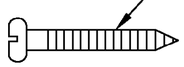

COMBINATION HEAD SCREW
SELF TAPPING 6 X 20mm
QUANTITY 2

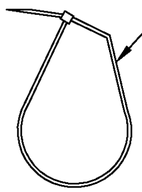

CABLE TIE
QUANTITY 1

COLOR	PART NUMBER
ELECTRIC IVORY	1–1116697–1
NEMA GRAY	1116697–4
WHITE	1116697–3
BLACK	1116697–2
LIGHT ALMOND	1116697–1

THIS DRAWING IS A CONTROLLED DOCUMENT.

DIMENSIONS: mm [INCHES]

TOLERANCES UNLESS OTHERWISE SPECIFIED:
0 PLC ± –
1 PLC ± –
2 PLC ± –
3 PLC ± –
4 PLC ± –
ANGLES ± –

MATERIAL 1

FINISH –

DWN G. GARRETT 15JUL99
CHK G. BOWMAN 15JUL99
APVD G. BOWMAN 15JUL99
PRODUCT SPEC –
APPLICATION SPEC –
WEIGHT –

AMP Incorporated
Harrisburg PA 17105–3608

NAME KIT, SINGLE PORT MODULAR JACK BOX

SIZE	CAGE CODE	DRAWING NO	RESTRICTED TO
A2	00779	C–1116697	–

CUSTOMER DRAWING | SCALE 2:1 | SHEET 1 OF 1 | REV 0

1116697

AMP 1471–9 REV 23FEB95

15JUL99 11:52am 'AMP_Incorporated'