OPERATION MANUAL

GREENLEE®
A Textron Company

Serialnummer

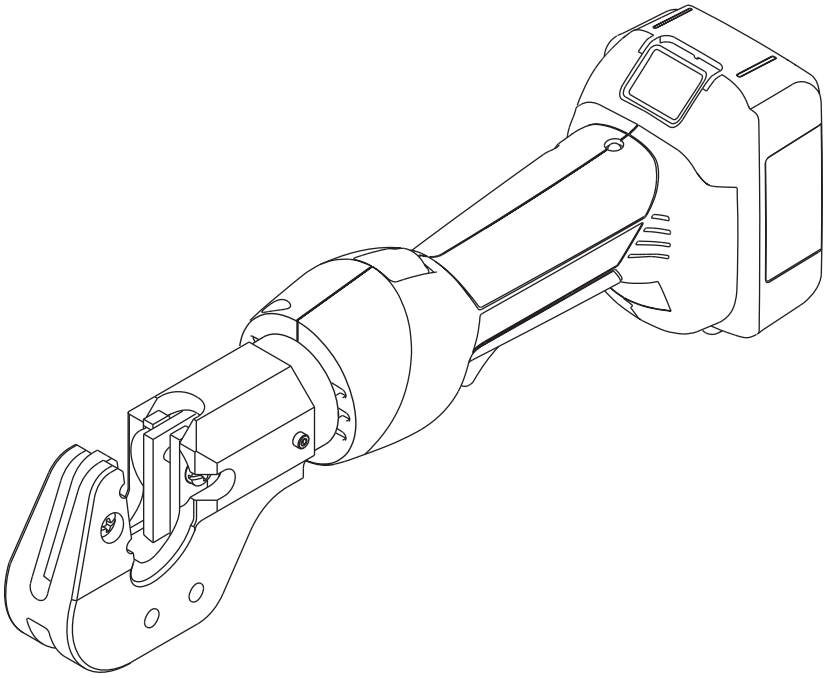

GATOR® EK210L Battery-powered Crimping Tool

Read and **understand** all of the instructions and safety information in this manual before operating or servicing this tool.

Register this product at www.greenlee.com

52047664 REV 2
© 2011 Greenlee Textron Inc.
2/11

Table of Contents

Description 2
Safety 2
Purpose of this Manual 2
Important Safety Information 3–4
Identification 5
Specifications 5
Operation 6–7
Maintenance 8
Troubleshooting 9

Description

The EK210L Battery-powered Crimping Tool is a hand-held, self-contained crimping tool intended to crimp cable using Kwik Cycle® 9 die sets.

This tool is protected by U.S. Patent No. 6,276,186, 6,401,515, 6,718,870, 7,086,979, and 7,254,982.

Safety

Safety is essential in the use and maintenance of Greenlee tools and equipment. This manual and any markings on the tool provide information for avoiding hazards and unsafe practices related to the use of this tool. Observe all of the safety information provided.

Purpose of this Manual

This manual is intended to familiarize all personnel with the safe operation and maintenance procedures for the following Greenlee tool:

EK210L Battery-powered Crimping Tool

Keep this manual available to all personnel.

Replacement manuals are available upon request at no charge at www.greenlee.com.

Do not discard this product or throw away!
For recycling information, go to www.greenlee.com.

All specifications are nominal and may change as design improvements occur. Greenlee Textron Inc. shall not be liable for damages resulting from misapplication or misuse of its products.

GATOR and Kwik Cycle are registered trademarks of Greenlee Textron Inc.

KEEP THIS MANUAL

IMPORTANT SAFETY INFORMATION

SAFETY ALERT SYMBOL

This symbol is used to call your attention to hazards or unsafe practices which could result in an injury or property damage. The signal word, defined below, indicates the severity of the hazard. The message after the signal word provides information for preventing or avoiding the hazard.

⚠DANGER

Immediate hazards which, if not avoided, WILL result in severe injury or death.

⚠WARNING

Hazards which, if not avoided, COULD result in severe injury or death.

⚠CAUTION

Hazards or unsafe practices which, if not avoided, MAY result in injury or property damage.

⚠WARNING

Read and understand all of the instructions and safety information in this manual before operating or servicing this tool.

Failure to observe this warning could result in severe injury or death.

⚠WARNING

Electric shock hazard:

This tool is not insulated. When using this unit on or near energized electrical lines, use proper personal protective equipment.

Failure to observe this warning could result in severe injury or death.

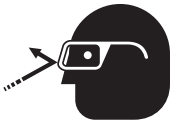

⚠WARNING

Wear eye protection when operating or servicing this tool.

Failure to wear eye protection could result in serious eye injury from flying debris or hydraulic oil.

⚠WARNING

Skin injection hazard:

Do not use hands to check for oil leaks. Oil under pressure easily punctures skin. If injured, seek medical attention immediately to remove oil.

Failure to observe this warning could result in serious injury, gangrene, or death.

⚠WARNING

Do not use solvents or flammable liquids to clean the tool body. Solvents or flammable liquids could ignite and cause serious injury or property damage.

⚠WARNING

An incomplete crimp can cause a fire.

- Use proper die, connector, and cable combinations. Improper combinations can result in an incomplete crimp.
- The relief valve sounds and the ram automatically retracts to indicate a completed crimp. If you do not hear the sound of the relieve valve or the ram does not automatically retract, the crimp is not complete.

Failure to observe these warnings could result in severe injury or death.

IMPORTANT SAFETY INFORMATION

⚠WARNING

Pinch points:

- Remove battery before changing dies, adapters, or jaws.
- Keep hands away from the crimping tool head when crimping.

Failure to observe these warnings could result in severe injury or death.

⚠WARNING

Do not dispose of batteries in a fire. They will vent fumes and may explode.

Failure to observe this warning could result in severe injury from harmful fumes or burns from flying debris.

⚠WARNING

Inspect tool and dies before use. Replace any worn or damaged parts. A damaged or improperly assembled tool can break and strike nearby personnel.

Failure to observe this warning could result in severe injury or death.

⚠CAUTION

- Do not use this tool for continuous use. After 30 to 40 cycles, allow the tool to cool for 15 minutes.
- Do not secure this tool in a vise. This tool is designed for hand-held operation.
- This tool may be used in damp or wet environments; however, air-drying is recommended before use if the tool becomes soaked. Damage may result when the tool is operated prior to thorough drying when electrical components are soaked.
- Use this tool for the manufacturer's intended purpose only.

Failure to observe these precautions may result in injury or property damage.

⚠CAUTION

Do not allow anything to contact the battery terminals.

- Do not immerse the batteries in liquid. Liquid may create a short circuit and damage the battery. If batteries are immersed, contact your service center for proper handling.
- Do not place the battery into a pocket, tool pouch, or tool box with conductive objects. Conductive objects may create a short circuit and damage the battery.
- Do not place a battery on moist ground or grass. Moisture may create a short circuit and damage the battery.

Failure to observe these precautions may result in injury or property damage.

⚠CAUTION

- Do not store the battery at more than 122 °F (50 °C) or less than –4 °F (–20 °C). Damage to the battery can result.
- Do not use another manufacturer's charger. Other manufacturers' chargers may overcharge and damage the battery.
- Do not attempt to open the battery. It contains no user-serviceable parts.

Failure to observe these precautions may result in injury or property damage.

⚠CAUTION

Do not perform any service or maintenance other than as described in this manual. Injury or damage to the tool may result.

Failure to observe this precaution may result in injury and property damage.

Note: Keep all decals clean and legible, and replace when necessary.

Identification

1. Crimping Dies
2. Crimping Head
3. Retract Button
4. LED Indicator (red)
5. Battery Lock
6. Battery Cartridge
7. LED Work Light (white)
8. Trigger

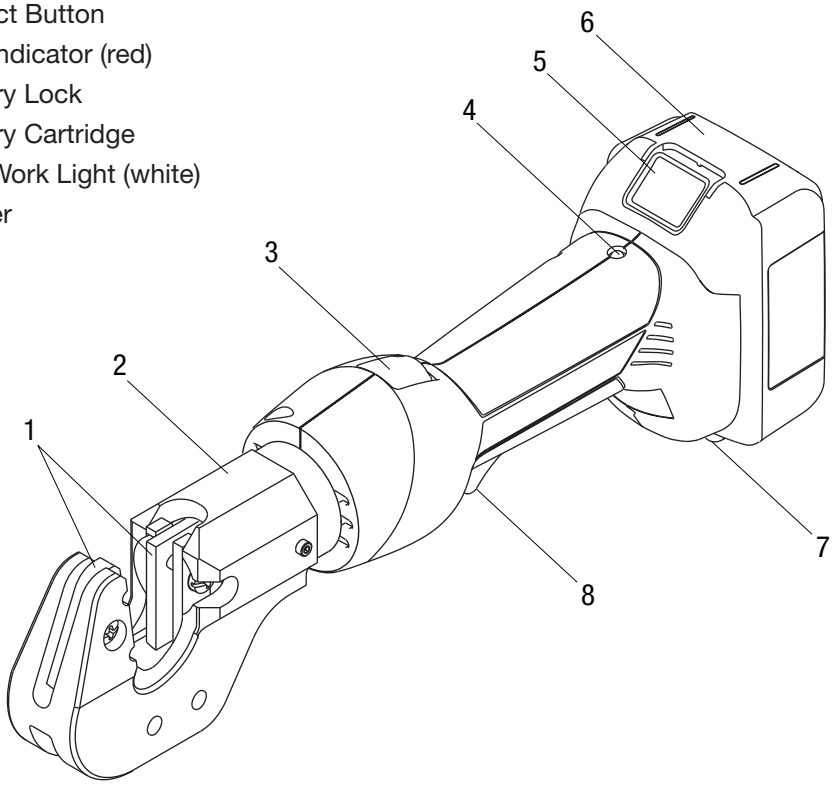

Specifications

Crimping Tool

Length (with battery)	12.75" (323.8 mm)
Width	2.87" (72.9 mm)
Depth	4.50" (114.3 mm)
Weight	3.3 lb (1.5 kg)
Crimping Force	1.5 tons (13 kN)
Hydraulic Oil	52057878 biodegradable hydraulic fluid
Recommended Operating Temperature Range	5 °F to 122 °F (–15 °C to 50°C)
Battery Charger	Read the instructions supplied with the battery charger

52047087	120 VAC corded adapter	52054992	Li (18 V) to NiCd, NiMH (12 V) charger adapter
52047088	230 VAC corded adapter	52049201	120 VAC, 18 V charger
52049190	18 V, 1.5 Ah lithium-ion battery	52049202	230 VAC, 18 V charger
52049189	18 V, 3.0 Ah lithium-ion battery	52049204	12 VDC, 18 V charger

Operation

⚠WARNING

Inspect tool and dies before use. Replace any worn or damaged parts. A damaged or improperly assembled tool can break and strike nearby personnel.

Failure to observe this warning could result in severe injury or death.

⚠WARNING

Electric shock hazard:

This tool is not insulated. When using this unit on or near energized electrical lines, use proper personal protective equipment.

Failure to observe this warning could result in severe injury or death.

⚠WARNING

Wear eye protection when operating or servicing this tool.

Failure to wear eye protection could result in serious eye injury from flying debris or hydraulic oil.

⚠WARNING

Pinch points:

- Remove battery before changing dies, adapters, or jaws.
- Keep hands away from the crimping tool head when crimping.

Failure to observe these warnings could result in severe injury or death.

⚠CAUTION

- Do not use this tool for continuous use. After 30 to 40 cycles, allow the tool to cool for 15 minutes.
- Do not secure this tool in a vise. This tool is designed for hand-held operation.
- This tool may be used in damp or wet environments; however, air-drying is recommended before use if the tool becomes soaked. Damage may result when the tool is operated prior to thorough drying when electrical components are soaked.
- Use this tool for the manufacturer's intended purpose only.

Failure to observe these precautions may result in injury or property damage.

Charging the Battery

Read the instructions supplied with the battery charger.

LED Work Light (white)

This LED automatically turns on when the trigger is pulled. It remains on for 10 seconds after the trigger is released.

LED Indicator (red)

This tool is equipped with a special circuit board incorporating several important features to inform the user about the current status of the unit. The LED signals in the following cases:

What happens	Signal	What it means
Flashing light for 2 seconds	●●	Battery is inserted in tool
Constant light for 20 seconds at end of cycle	▬	Battery charge is below 17 V at beginning of cycle
Tool will **not** start, and constant light for 20 seconds when trigger is released	▬	Battery charge is below 16 V at beginning of cycle
Tool will stop, and constant light for 20 seconds after trigger is released	▬	Battery voltage drops below 13 V during cycle
Tool will stop, and flashing light for 20 seconds when trigger is released	●●●●	Motor current exceeds 20 A during cycle
		Circuit has become too hot

Pressure Sensor

This tool is equipped with a pressure sensor that alerts the user of an incomplete crimp.

- If the tool is manually retracted before completion of a crimp, the red LED and an audible beep will be active for 2 seconds.
- If the tool is unable to reach the required crimp force, the red LED, work light, and an audible beep will pulse until after the trigger is released.

Operation (cont'd)

Installing Dies

1. Select the proper dies for the intended crimp.
2. Slide the die into the crimping head and secure with screw.
3. Properly position the second die. Repeat Step 2.

Preparing Cable

Follow the lug manufacturer's instructions for appropriate cable strip length.

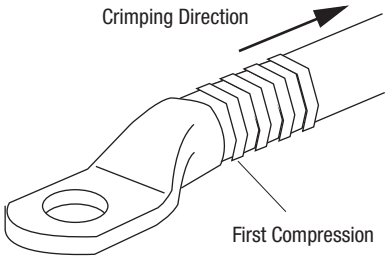

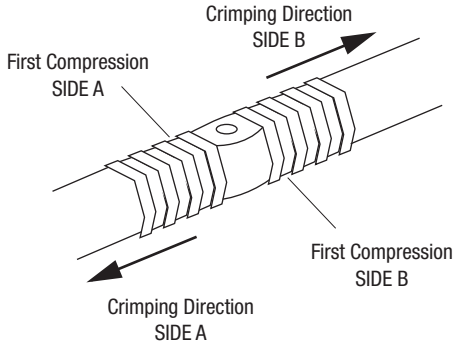

Crimping Cable

1. Insert the properly assembled connector into the crimping head.
2. Pull the trigger to make the crimp.
3. Hold the trigger down until the crimping tool achieves pressure relief, which is accompanied by an audible "pop".
4. The crimping tool returns automatically.
5. Position the crimping tool for next crimp. Repeat Steps 2 and 3 for the number of crimps as described in this manual.

Note: If it is necessary to retract the ram before a crimping cycle is completed, push the retract button. Pushing the retract button will result in the complete retraction of the ram.

⚠WARNING

An incomplete crimp can cause a fire.

- Use proper die, connector, and cable combinations. Improper combinations can result in an incomplete crimp.
- The relief valve sounds and the ram automatically retracts to indicate a completed crimp. If you do not hear the sound of the relieve valve or the ram does not automatically retract, the crimp is not complete.

Failure to observe these warnings could result in severe injury or death.

Maintenance

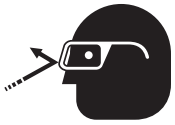

⚠WARNING

Wear eye protection when operating or servicing this tool.

Failure to wear eye protection could result in serious eye injury from flying debris or hydraulic oil.

⚠WARNING

Skin injection hazard:

Do not use hands to check for oil leaks. Oil under pressure easily punctures skin. If injured, seek medical attention immediately to remove oil.

Failure to observe this warning could result in serious injury, gangrene, or death.

⚠WARNING

Do not use solvents or flammable liquids to clean the tool body. Solvents or flammable liquids could ignite and cause serious injury or property damage.

⚠WARNING

Pinch points:

- Remove battery before changing dies, adapters, or jaws.
- Keep hands away from the crimping tool head when crimping.

Failure to observe these warnings could result in severe injury or death.

IMPORTANT

Relief valve adjustments must be done by an authorized service center.

Daily

Before use:

1. Inspect the tool for wear or damage, such as cracks, gouges, or chips.
2. Inspect the tool for damage or leaks.
3. Inspect the rotation of the head assembly. Fully retract the ram. The head should rotate no more than 360°. If damage is detected, send the tool to a Greenlee Authorized Service Center for inspection.

After use:

1. Use a damp cloth and mild detergent to clean the housing. Allow the housing to dry.
2. Fully retract the ram. Place the tool in the carrying case and store in a cool, dry place.
3. If necessary, recharge the batteries. Refer to the instructions supplied with the battery charger.

Monthly

1. Thoroughly clean all surfaces.
2. Check the oil level.

Annually or After 10,000 Crimps

1. Replace the hydraulic oil.
2. Send the tool to a Greenlee Authorized Service Center for inspection.

Checking the Oil Level

1. Remove the screws holding the housing cover together.
2. Point the crimping head downward and remove the oil reservoir plug. Fill reservoir if necessary.
3. Replace the oil plug and housing cover.

Troubleshooting

Before You Begin

1. Make sure that the battery is charged. Recheck the battery after several minutes to make sure the battery is holding its charge.
2. Use a **nonflammable** contact cleaner or pencil eraser to clean the electrical contacts on the battery and tool.
3. Reinstall the battery and check the tool again.

Problem	Possible Cause	Probable Remedy
Tool is inoperative.	Dirt, contaminants, etc., in ram area of tool.	Clean tool.
	Tool battery contacts damaged.	Reform contacts.
	Tool components worn or damaged.	Return tool to a Greenlee Authorized Service Center.
Motor is inoperative.	Low or uncharged battery.	Try known charged battery. Inoperative battery may be discharged or may have reached life expectancy.
	Broken switch components.	Return tool to a Greenlee Authorized Service Center.
Motor runs but tool will not complete a cycle.	Oil level low.	Return tool to a Greenlee Authorized Service Center.
	Air in hydraulic system.	Pull trigger and hold retract button simultaneously. Run for approximately 10 seconds, and then attempt to crimp. If unsuccessful, return tool to a Greenlee Authorized Service Center.
	Cold oil.	Pull trigger and hold retract button simultaneously to warm oil. Store tool in warm area.
Dies stop during operation.	Oil level low.	Return tool to a Greenlee Authorized Service Center.
	Air in hydraulic system.	Pull trigger and hold retract button simultaneously. Hold for approximately 10 seconds.
LED glows for 20 seconds.	Battery charge low.	Charge or replace battery.
Tool loses oil.	Damaged internal seal.	Return tool to a Greenlee Authorized Service Center.

4455 Boeing Drive • Rockford, IL 61109-2988 • USA • 815-397-7070
An ISO 9001 Company • Greenlee Textron Inc. is a subsidiary of Textron Inc.

USA Tel: 800-435-0786 Fax: 800-451-2632
Canada Tel: 800-435-0786 Fax: 800-524-2853
International Tel: +1-815-397-7070 Fax: +1-815-397-9247

www.greenlee.com