Open-Frame Rack Cable Managers

CABLETEK™ Horizontal Cable Manager

DCHD2 shown

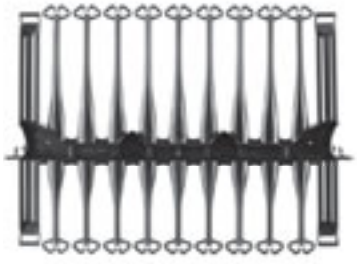

Arrowhead fingers funnel cable into base and hold it securely

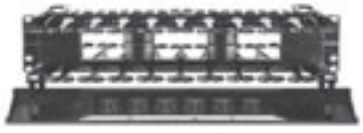

Large pass-through holes facilitate efficient cable routing

Vertical and horizontal cable manager system installed on a 2-post rack. Vertical and horizontal cable managers work together to make an orderly installation.

Industry Standards

EIA 310-D

Application

This cable manager features heavy-duty endposts, arrowhead fingers and tool-less mounting to easily route Cat 5e, 6 and 6A cable horizontally in standard 19-in. cabinets or on 2- or 4-post open frame racks.

Features

- Snap-in mounting provision holds cable manager in place while mounting screws are installed
- Robust arrowhead fingers are shaped to funnel cables into base and are made of black composite material
- Robust rounded end posts support cable as it enters and leaves cable manager and maintains proper cable bend radius
- Deep cable compartments allow maximum cable density
- Rounded edges throughout protect cable jackets from damage
- Pass-through holes on double-sided models protect cable while facilitating routing between front and back sides
- Single- and double-sided units provide high cable capacity, including 5e, 6 and 6A cables
- 1 RU and 2 RU heights allow greater flexibility in optimizing rack capacity
- Removable hinged cover opens top or bottom, snaps closed for assured cable protection and professional appearance
- Double-sided model has covers on both front and back
- Covers stay open during installation and maintenance procedures
- Horizontal and vertical cable managers designed as a system for streamlined appearance and improved functionality
- Combination head 10-32 and 12-24 screws included for mounting

Specifications

- Made of UL listed black composite material

Finish

Low gloss, matches look of RAL 9005 textured paint

Bulletin: DACCY

© 2011 Pentair Technical Products

Open-Frame Rack Cable Managers

Standard Product **CABLETEK™ Horizontal Cable Managers; 60% Cable Manager Fill Rate**

Catalog Number	Description	Rack Units	A in./mm	Front Cross-Section Area (in.²)	Front Cable Fill Rate 60% 5e Cable (0.22-in. dia.)	Front Cable Fill Rate 60% 6 Cable (0.25-in. dia.)	Front Cable Fill Rate 60% 6A Cable (0.30-in. dia.)	Back Cross-Section Area (in.²)	Back Cable Fill Rate 60% 5e Cable (0.22-in. dia.)	Back Cable Fill Rate 60% 6 Cable (0.25-in. dia.)	Back Cable Fill Rate 60% 6A Cable (0.30-in. dia.)
DCHS1	Single sided	1	1.75 44	4.2	66	57	35	—	—	—	—
DCHS2	Single sided	2	3.50 89	13.2	208	161	112	—	—	—	—
DCHD2	Double Sided	2	3.50 89	13.2	208	161	112	14.1	223	172	119

Single-Sided
1 RU Cable Manager

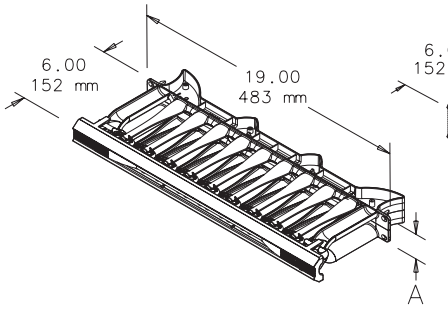

Single-Sided
2 RU Cable Manager

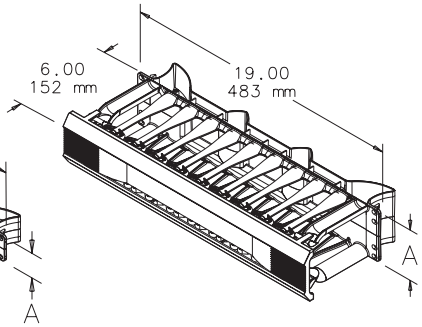

Double-Sided
2 RU Cable Manager

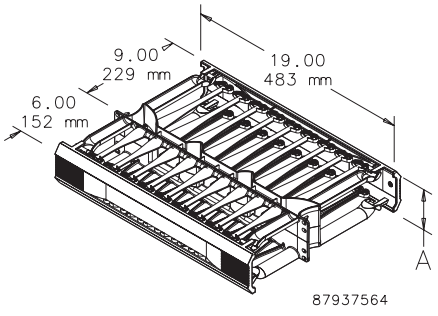

Arrowhead Cable Capacity; 60% Fill Rate

Location	Cross-Section Area (in.²)	5e Cable (0.22-in. dia.)	6 Cable (0.25-in. dia.)	6A Cable (0.30-in. dia.)
Front	5.52	90	67	46
Back	9.27	145	113	78

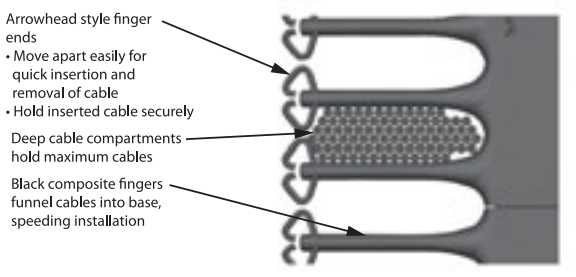

© 2011 Pentair Technical Products

Open-Frame Rack Cable Managers

CABLETEK™ Vertical Cable Manager

Spring loaded central latch operates easily and fastens securely. Pass-through holes facilitate efficient cable routing.

Tie-down loops accept Velcro™ Cable Wraps

Vertical and horizontal cable manager system installed on a 2-post rack. Vertical and horizontal cable managers work together to make an orderly installation.

Industry Standards

EIA 310-D

Application

Available in single- and double-sided models, this vertical cable manager mounts on the sides of or between 2- and 4-post open frame racks. The front side of the manager provides support, management and high capacity for patch cords, while the back supports Cat 5e, 6, 6A and fiber optic cables.

Features

- Easily removable one-piece front cover with access from right or left as needed opens 180° to allow full access to cables
- Self-aligning bolt locations minimize lifting and speed installation
- Self-captivating fasteners; bolt doesn't turn while tightening nut
- Generous finger depth allows for maximum cable density and allows smooth transitions from vertical to horizontal positions
- Unobstructed cable access to rack equipment—no keep-out areas
- Rounded edges on composite material and grommets protect cable jackets from damage
- Robust arrowhead fingers are shaped to funnel cables into base and are made of black composite material
- Cable tiedown points provided on back
- Pass-through holes protect cable while facilitating routing between front and back
- Single central door latch allows quick and easy access to cables
- Double-sided models include five posts and gates that can be positioned as needed to support and contain cables. Additional posts and gates available as accessories.
- Posts snap into prepunched holes in the back of the cable manager
- Gates snap onto posts, open from left or right as needed and swing 280° for cable access. Posts can be used alone as slack spools to control long patch cords.
- Horizontal and vertical cable managers designed as a system for streamlined appearance and improved functionality

Specifications

- Front door and cable channel made of multi-formed lightweight aluminum
- Hinge points and supporting fingers made of high-strength composite material

Finish

Aluminum components are coated with RAL 9005 black low-gloss lightly-textured polyester powder paint.
Composite parts have a low-gloss finish that matches look of RAL 9005 textured paint.

Bulletin: DOFRY

© 2011 Pentair Technical Products

Open-Frame Rack Cable Managers

Standard Product **Vertical Cable Manager**

Catalog Number	Description	Fits Rack Height (ft.)	Rack Units	A (in.)	A (mm)	B (in.)	B (mm)	X (in.)	X (mm)
DV6S7	Single Sided	7	45 U	84.00	2134	6.25	159	7.12	183
DV10S7	Single Sided	7	45 U	84.00	2134	10.25	260	11.21	285
DV12S7	Single Sided	7	45 U	84.00	2134	12.25	311	13.21	336
DV6D7	Double Sided	7	45 U	84.00	2134	6.25	159	7.12	183
DV10D7	Double Sided	7	45 U	84.00	2134	10.25	260	11.21	285
DV12D7	Double Sided	7	45 U	84.00	2134	12.25	311	13.21	336
DV6S8	Single Sided	8	51 U	96.00	2438	6.25	159	7.12	183
DV10S8	Single Sided	8	51 U	96.00	2438	10.25	260	11.21	285
DV12S8	Single Sided	8	51 U	96.00	2438	12.25	311	13.21	336
DV6D8	Double Sided	8	51 U	96.00	2438	6.25	159	7.12	183
DV10D8	Double Sided	8	51 U	96.00	2438	10.25	260	11.21	285
DV12D8	Double Sided	8	51 U	96.00	2438	12.25	311	13.21	336
DV6S9	Single Sided	9	58 U	108.00	2743	6.25	159	7.12	183
DV10S9	Single Sided	9	58 U	108.00	2743	10.25	260	11.21	285
DV12S9	Single Sided	9	58 U	108.00	2743	12.25	311	13.21	336
DV6D9	Double Sided	9	58 U	108.00	2743	6.25	159	7.12	183
DV10D9	Double Sided	9	58 U	108.00	2743	10.25	260	11.21	285
DV12D9	Double Sided	9	58 U	108.00	2743	12.25	311	13.21	336

B dimension represents the mounting space between ganged open-frame racks.

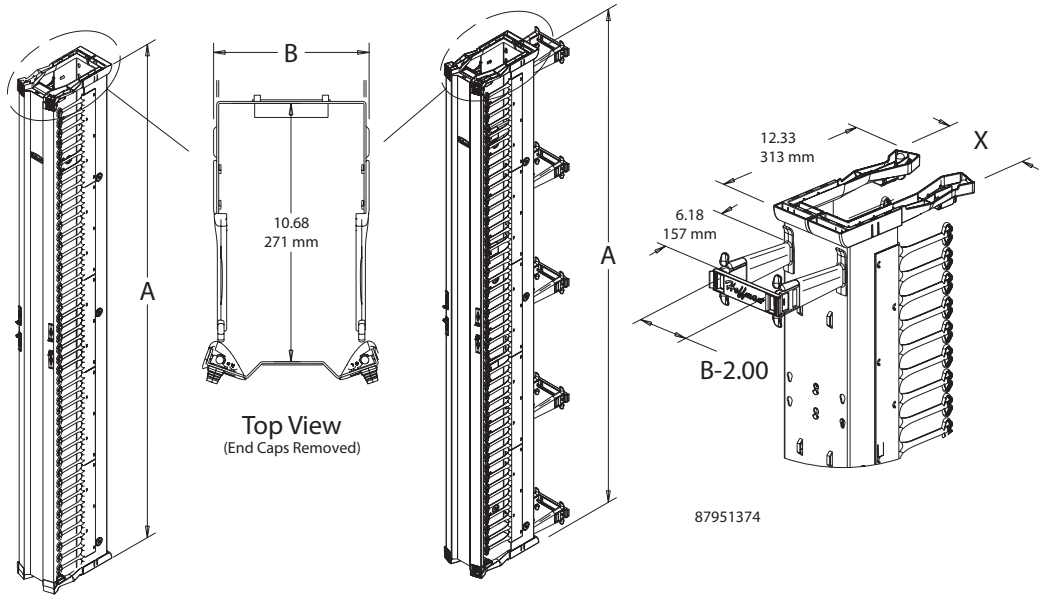

Cable Manager Cable Capacity; 60% Fill Rate

Cable Manager Width (inch)	Front Cross-Section Area (in.²)	Front Cable Fill Rate 60% 5e Cable (0.22-in. dia.)	Front Cable Fill Rate 60% 6 Cable (0.25-in. dia.)	Front Cable Fill Rate 60% 6A Cable (0.30-in. dia.)	Back Cross-Section Area (in.²)	Back Cable Fill Rate 60% 5e Cable (0.22-in. dia.)	Back Cable Fill Rate 60% 6 Cable (0.25-in. dia.)	Back Cable Fill Rate 60% 6A Cable (0.30-in. dia.)
6.00	58.1	917	710	493	27.9	441	341	236
10.00	100.8	1592	1232	855	51.7	816	631	439
12.00	122.1	1928	1492	1036	64.0	1011	782	543

Arrowhead Cable Capacity, 60% Fill Rate

Cross-Section Area (in.²)	5e Cable (0.22-in. dia.)	6 Cable (0.25-in. dia.)	6A Cable (0.30-in. dia.)
5.44	85	66	46

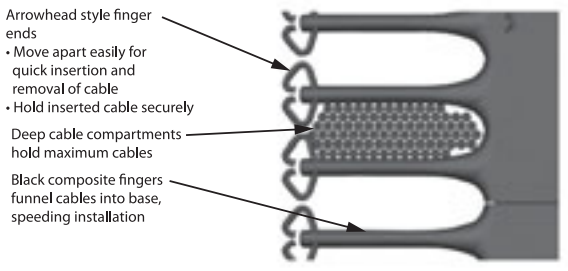

© 2011 Pentair Technical Products

Open-Frame Rack Cable Managers

CABLETEK™ Post and Gate Kits

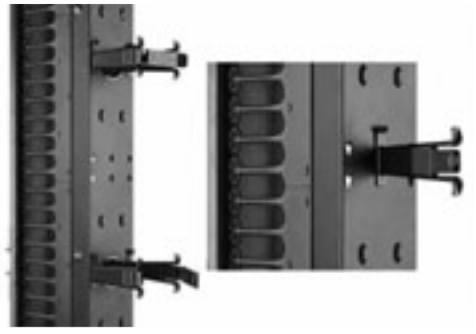

Catalog Number	Description	B (in.)	B (mm)	Pkg. Qty.
DGP3	Post and Gates	3.00	76	10 sets
DGP6	Post and Gates	6.00	152	10 sets
DGP10	Post and Gates	10.00	254	10 sets
DGP12	Post and Gates	12.00	305	10 sets

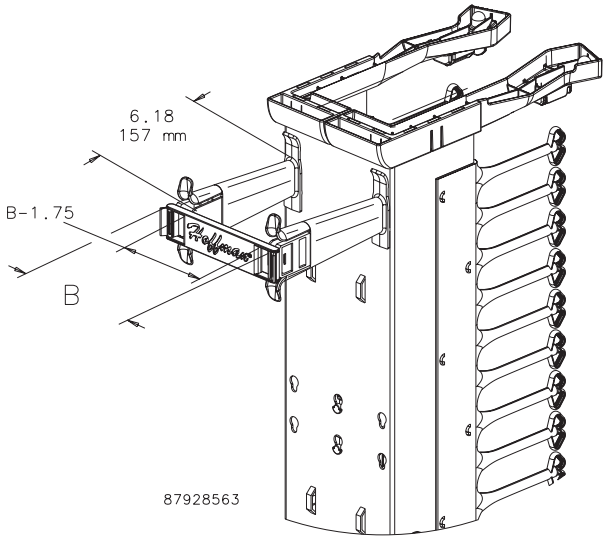

Post and Gate Kits snap together quickly without tools. Each set consists of two posts and one gate. Posts snap into prepunched holes on the backs of all CABLETEK™ Vertical Cable Managers and are easily repositionable without tools. Gates swivel open 280 degrees left or right to allow convenient cable access. When closed, post and gates contain, support and secure large volumes of cables and cable bundles. Molded from black composite material with large radius, these Post and Gates smoothly transition cables from vertical to horizontal positions. Order additional Posts and Gate Kits to add to single- and double-sided cable managers.

Single posts can be used alone as slack spools on the front side of the cable manager.

Bulletin: DOFRY

Waterfall Top

For routing cable across the top of an open-frame rack. Provides horizontal-to-vertical transition bend radius for compliant installation of Category 5, 6, 6A and fiber optic cable. Makes a complete cable management system when used with vertical and horizontal cable managers. Mounts on 2- and 4-post open-frame racks. Material is steel with RAL 9005 black polyester powder paint finish.

Bulletin: DOFRY

Catalog Number	Description	Fits Open Frame Rack
EWFT	Waterfall Top	19 in.

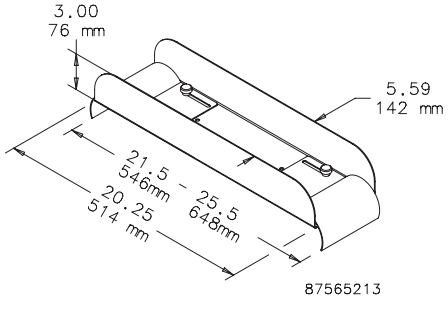

D-Ring Assembly

Catalog Number	Description	B2 in./mm	L2 in./mm	W in./mm	Rack Units
ECM19DR1U	19-in. D-Ring Assembly	1.22 31	2.88 73	1.75 44	1
ECM19DR2U	19-in. D-Ring Assembly	2.22 56	4.42 112	3.50 89	2

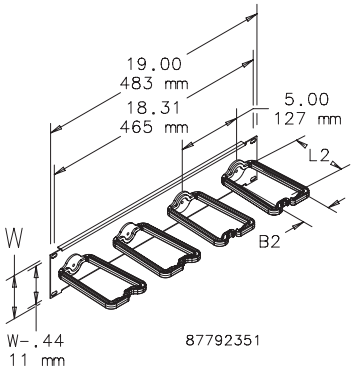

Mounts horizontally on 19-in. racks. Allows grouping vertical cable runs. D-Rings rotate on bracket for easy cable positioning; snap open for easy access for cable updates, yet latch securely. Back plate made of steel with RAL 9005 black polyester powder paint finish; D-Rings are black plastic. Mounting hardware included.

Bulletin: DACCY

© 2011 Pentair Technical Products

Open-Frame Rack Cable Managers

Tie-Down Panel

Catalog Number	Description	W in./mm	Rack Units
ECM19TP1U	19-in. Tie-Down Panel	1.75 44	1
ECM19TP2U	19-in. Tie-Down Panel	3.50 89	2

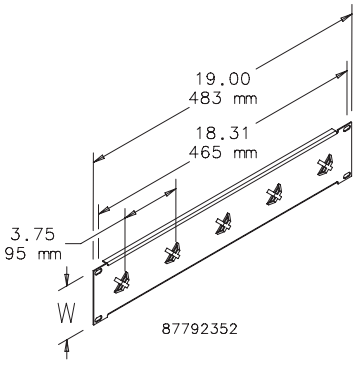

Tie-Down Panels mount horizontally on 19-in. racks. Steel panels with RAL 9005 black polyester powder paint finish have slots for VELCRO® cable wraps. Each panel includes 10 black 8-in. (203-mm) VELCRO cable wraps. Mounting hardware included.

VELCRO is a trademark of Velcro Industries B.V

Bulletin: DACCY

Tie-Down Rack

Catalog Number	Description	Rack Units
ECM19TD2U	19-in. Tie Down Rack	0

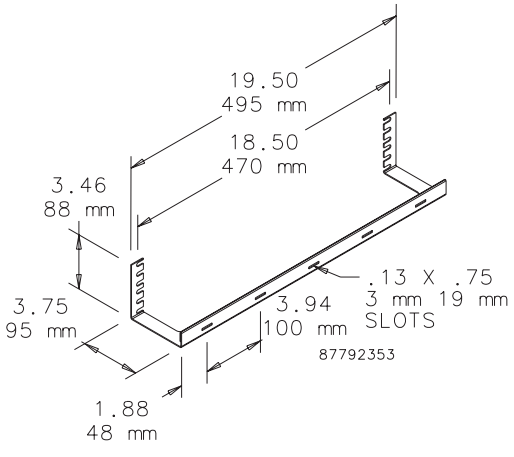

This zero-rack-unit Tie-Down Rack mounts horizontally on 19-in. racks. It takes up minimum space yet effectively controls and separates cable runs. Made of steel with RAL 9005 black polyester powder paint finish. Includes slots for cable wraps. Each rack includes 10 black 8-in. (203-mm) VELCRO® cable wraps. Mounting hardware included.

VELCRO is a trademark of VELCRO Industries B.V.

Bulletin: DACCY

Wire Form Cable Manager

Catalog Number	Description	Use With	Rack Units
EWVC19H	19-in. Wire Form Cable Manager	19-in. racks	0

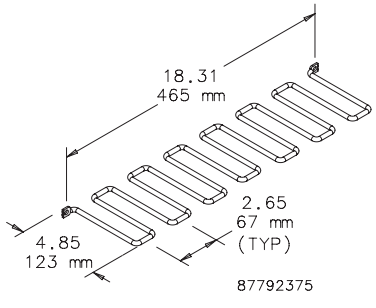

This cable manager takes up minimum space, but provides excellent cable sorting capability. Designed to mount on top of patch panels, this zero-rack-unit cable manager provides support and control of cables. Made of plated steel. Mounting hardware included.

Bulletin: DACCY

© 2011 Pentair Technical Products

Open-Frame Rack Cable Managers

Cable Trough

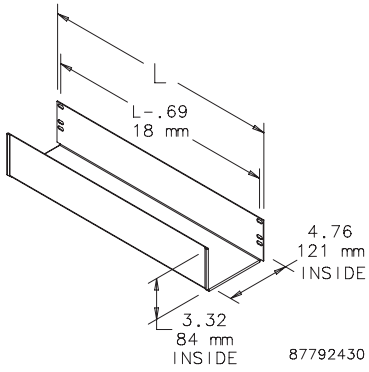

Mounts horizontally on 19-in. or 23-in. rack angles to support cables and power cords. Made of steel with RAL 9005 black polyester powder paint finish.

Bulletin: DOFRY

Catalog Number	Description	L in./mm	Rack Units
ECT19	19-in. Cable Trough	19.00 483	2
ECT23	23-in. Cable Trough	23.00 584	2

Cable Manager

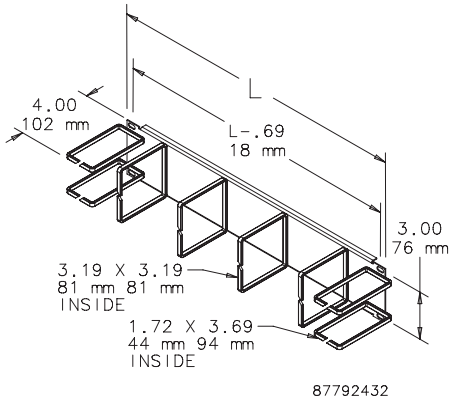

Mounts horizontally. For routing and bundling cable on 19-in. or 23-in. racks. Material is steel with RAL 9005 black polyester powder paint finish. Horizontal-Vertical Cable Manager shown.

Bulletin: DACCY, DOFRY

Catalog Number	Description	L in./mm	Rack Units
ECK19H	19-in. Horizontal Cable Manager	19.00 483	2
ECK19HV	19-in. Horizontal-Vertical Cable Manager	19.00 483	2
ECK23HV	23-in. Horizontal-Vertical Cable Manager	23.00 584	2

Horizontal Cable Management Cover

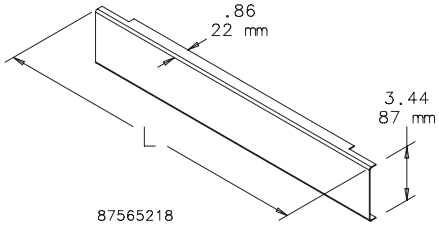

Provides a finished appearance to a 19-in. or 23-in. open-frame rack cable management system. Models snap onto ECK19H, ECK19HV and ECK23HV Cable Managers. Material is steel with RAL 9005 black polyester powder paint finish.

Bulletin: DACCY

Catalog Number	Description	Fits Horizontal Cable Manager	L in./mm
ECKCVR19	19-in. Cable Manager Cover	ECK19H, ECK19HV	19.00 483
ECKCVR23	23-in. Cable Manager Cover	ECK23HV	23.00 594

© 2011 Pentair Technical Products

Open-Frame Rack Cable Managers

Horizontal Cable Manager Bar

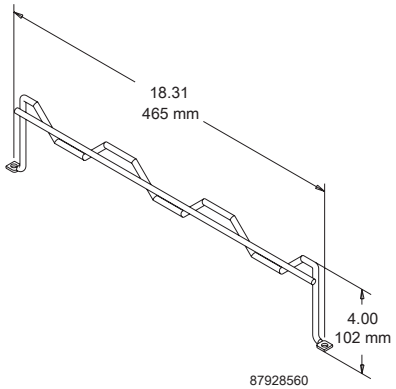

Supports cables between vertical and horizontal cable managers. Designed for use with VELCRO® cable ties. Angled tie-off surfaces allow cable to follow natural flow and maintain proper bend radius. Can be installed behind patch panels to support large permanent link cable bundles. Can also be installed on top of patch panels as a zero-RU manager to separate and control patch cables. Made of steel with a black finish. Secures standard cables, including CAT 5e, 6 and 6A cables. Meets EIA 310-D standard. Includes mounting fasteners.

VELCRO is a trademark of VELCRO Industries B.V.

Bulletin: DACCY

Catalog Number	Description	Rack Units
DCHB1	Horizontal Cable Manager Bar	1

© 2011 Pentair Technical Products