INLINE® Accessories

INLINE® Panels

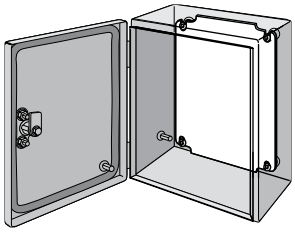

Panels are 12 gauge steel with a white polyester powder paint or conductive finish. Ground hole is labeled. Sized for M6 fastener.

Bulletin: A53, A54P

Catalog Number	Material	Panel Size D x E (mm)	Panel Size D x E (in.)	Fits INLINE Enclosure Size (mm)
LP1515	Painted Steel	131 x 131	5.16 x 5.16	150 x 150
LP1515G	Conductive	131 x 131	5.16 x 5.16	150 x 150
LP2015	Painted Steel	181 x 131	7.13 x 5.16	200 x 150
LP2015G	Conductive	181 x 131	7.13 x 5.16	200 x 150
LP2520	Painted Steel	231 x 181	9.10 x 7.13	250 x 200
LP2520G	Conductive	231 x 181	9.10 x 7.13	250 x 200
LP3025	Painted Steel	281 x 231	11.07 x 9.10	300 x 250
LP3025G	Conductive	281 x 231	11.07 x 9.10	300 x 250
LP3530	Painted Steel	331 x 281	13.04 x 11.07	350 x 300
LP3530G	Conductive	331 x 281	13.04 x 11.07	350 x 300
LP2040	Painted Steel	181 x 381	7.13 x 15.01	200 x 400
LP2040G	Conductive	181 x 381	7.13 x 15.01	200 x 400
LP2060	Painted Steel	181 x 581	7.13 x 22.89	200 x 600
LP2060G	Conductive	181 x 581	7.13 x 22.89	200 x 600

INLINE® Landscape Panels

Panels are 12 gauge steel with a white polyester powder paint or conductive finish. They include a labeled ground hole sized for an M6 screw. Panels mount on studs provided in the enclosure or to optional DIN mounting brackets.

Bulletin: A54P

Catalog Number	Conductive Panel	Panel Size D x E (mm)	Panel Size D x E (in.)
LP2331	LP2331G	211 x 291	8.31 x 11.46
LP2346	LP2346G	211 x 441	8.31 x 17.36
LP2360	LP2360G	211 x 581	8.31 x 22.87
LP2377	LP2377G	211 x 751	8.31 x 29.57
LP2393	LP2393G	211 x 906	8.31 x 35.67

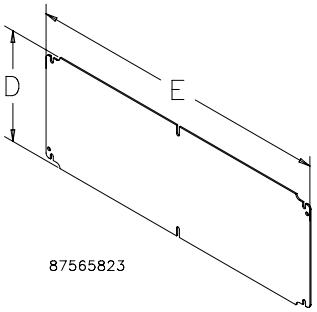

Mounting-Bracket Kit

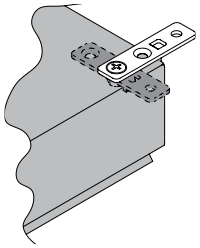

Kit is field-installable on all solid-back-body enclosures. Hardware included. Four brackets per kit.

Bulletin: A54SY, A54Y

Catalog Number	Description
LMFK	Plated steel mounting-bracket kit
LMFKSS	Type 316L stainless steel mounting-bracket kit

Lock Inserts

Lock Inserts can replace the standard slotted quarter-turn latch. Inserts have chrome finish. Key included.

Bulletin: A54Y

Catalog Number	Description
LLKSM7	Square 7 mm
LLKSM8	Square 8 mm
LLKDB	Daimler Benz
LLKDBM3	Double bit 3 mm
LLKSS	Slotted screw

© 2010 Pentair Technical Products

INLINE® Accessories

Wing Knob Latch

Wing Knob Latch can replace the standard slotted, quarter-turn latch on all hinged-cover and window-cover enclosures. Latch is black die-cast zinc. Includes two keys and installation instructions. Reduces UL Type rating from 4 or 4X to 12.

Bulletin: A54Y

Catalog Number	Product Weight
LLKWK	0.2 lb.

Grounding Kit

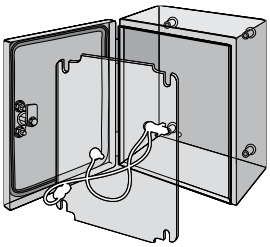

Grounding Kit provides means to attach a grounding conductor to the enclosure. Kit includes two insulated copper wires with a ring terminal at each end, all installation hardware and instructions.

Bulletin: A54Y

Catalog Number	Product Weight
LLGK	0.2 lb.

DIN3 Type Rails

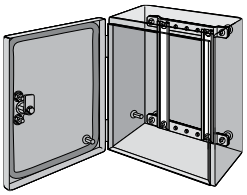

Rails furnish mounting surfaces for DIN3 mount snap-on devices. Rails attach vertically or horizontally to mounting brackets. Kit includes 4 rails and installation instructions. DIN3 Rail Mounting Brackets are required in order to mount rails.

Bulletin: A54Y

Catalog Number	Fits INLINE Enclosure	L (mm)	L (in.)	Pkg. Qty.
LDR3P15	when A or B = 150 mm	125	4.92	4
LDR3P20	when A or B = 200 mm	175	6.89	4
LDR3P25	when A or B = 250 mm	225	8.86	4
LDR3P30	when A or B = 300 mm	275	10.83	4
LDR3P31	when A or B = 310 mm	285	11.22	4
LDR3P35	when A or B = 350 mm	325	12.80	4
LDR3P40	when A or B = 400 mm	375	14.76	4
LDR3P46	when A or B = 460 mm	435	17.13	4
LDR3P60	when A or B = 600 mm	575	22.64	4
LDR3P77	when A or B = 770 mm	745	29.33	4
LDR3P93	when A or B = 925 mm	900	36.43	4

DIN Rail or Panel-Mounting Brackets

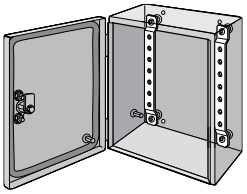

Use as a mounting framework to install DIN rails or a panel. Bracket is offset for additional space in front of or behind mounted equipment. Plated 12 gauge steel. Mounting hardware included. Brackets are required for DIN3 type rails.

Bulletin: A54Y

Catalog Number	Fits INLINE Enclosure
LMK15	when A or B = 150 mm
LMK20	when A or B = 200 mm
LMK23	when A or B = 230 mm
LMK25	when A or B = 250 mm
LMK30	when A or B = 300 mm
LMK35	when A or B = 350 mm

600-mm and longer enclosures require two sets of brackets for mounting panels.

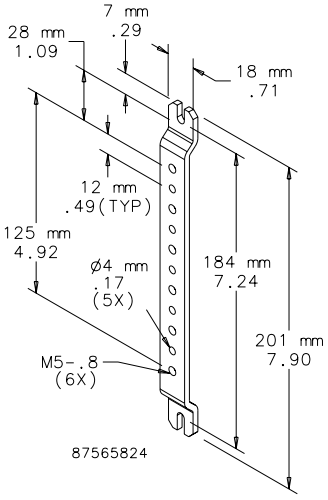

© 2010 Pentair Technical Products