Screw-Cover Type 3R Boxes and Enclosures

Screw-Cover, Type 3R

Industry Standards

UL 50, 50E Listed; Type 3R; File No. E27525
cUL Listed per CSA C22.2 No 94; Type 3R; File No. E27525

NEMA/EEMAC Type 3R
IEC 60529, IP32

Application

Use this enclosure with or without knockouts in outdoor applications as a wiring or junction box.

Features

- Drip shield top and seam-free sides, front and back
- Slip-on removable cover fastened with plated steel screws along bottom edge
- Handles on larger sizes (see table)
- Embossed mounting holes on back of enclosure
- Knockouts in bottom of 16 and 14 gauge enclosures
- Provision for padlocking
- No gasketing

Specifications

- 16, 14 or 12 gauge galvanized steel

Finish

ANSI 61 gray polyester powder paint finish inside and out over pretreated surfaces.

Accessories

See also Accessories.
Industrial Corrosion Inhibitors
Electric Heater
Grounding Device
Mounting Bracket Kit
Touch-Up Paint
Bulletin: A90S3

Standard Product

Catalog Number	AxBxC in./mm	Body Style	D in./mm	Mounting H in./mm	Mounting J in./mm	Knockout Pattern
A4R44	4.00 x 4.00 x 4.00	A	—	1.88	2.00	B-C
	102 x 102 x 102		—	48	51	
A6R44	6.00 x 4.00 x 4.00	A	—	1.88	1.06	B-C
	152 x 102 x 102		—	48	27	
A12R44	12.00 x 4.00 x 4.00	A	—	1.88	1.06	B-C
	305 x 102 x 102		—	48	27	
A6R64	6.00 x 6.00 x 4.00	A	—	2.25	1.06	B-C-D
	152 x 152 x 102		—	57	27	
A8R64	8.00 x 6.00 x 4.00	A	—	2.25	1.06	B-C-D
	203 x 152 x 102		—	57	27	
A8R84	8.00 x 8.00 x 4.00	A	—	2.25	1.06	F-G-H-I
	203 x 203 x 102		—	57	27	
A10R84	10.00 x 8.00 x 4.00	A	—	2.25	1.06	F-G-H-I
	254 x 203 x 102		—	57	27	
A12R84	12.00 x 8.00 x 4.00	A	—	2.25	1.06	F-G-H-I
	305 x 203 x 102		—	57	27	
A10R104	10.00 x 10.00 x 4.00	A	—	2.25	1.06	C-D-E-F-G
	254 x 254 x 102		—	57	27	
A12R104	12.00 x 10.00 x 4.00	A	—	2.25	1.06	C-D-E-F-G
	305 x 254 x 102		—	57	27	
A12R124	12.00 x 12.00 x 4.00	A	—	2.25	1.06	C-D-E-F-G
	305 x 305 x 102		—	57	27	
A18R124	18.00 x 12.00 x 4.00	A	—	2.25	1.06	C-D-E-F-G
	457 x 305 x 102		—	57	27	
A18R184	18.00 x 18.00 x 4.00	B	—	13.00	1.12	A-B-C-D-E-F-G-H-I
	457 x 457 x 102		—	330	28	
A6R66	6.00 x 6.00 x 6.00	A	—	2.25	1.06	B-C-D
	152 x 152 x 152		—	57	27	
A8R86	8.00 x 8.00 x 6.00	A	—	2.25	1.06	F-G-H-I
	203 x 203 x 152		—	57	27	
A10R86	10.00 x 8.00 x 6.00	A	—	2.25	1.06	F-G-H-I
	254 x 203 x 152		—	57	27	
A10R106	10.00 x 10.00 x 6.00	A	—	2.25	1.06	C-D-E-F-G
	254 x 254 x 152		—	57	27	
A12R86	12.00 x 8.00 x 6.00	A	—	2.25	1.06	F-G-H-I
	305 x 203 x 152		—	57	27	
A12R106	12.00 x 10.00 x 6.00	A	—	2.25	1.06	C-D-E-F-G
	305 x 254 x 152		—	57	27	
A12R126	12.00 x 12.00 x 6.00	A	—	2.25	1.06	C-D-E-F-G
	305 x 305 x 152		—	57	27	
A15R126	15.00 x 12.00 x 6.00	A	—	2.25	1.06	C-D-E-F-G
	381 x 305 x 152		—	57	27	

© 2010 Pentair Technical Products

Screw-Cover Type 3R Boxes and Enclosures

Catalog Number	AxBxC in./mm	Body Style	D in./mm	Mounting H in./mm	Mounting J in./mm	Knockout Pattern
A16R126	16.00 x 12.00 x 6.00	A	—	2.25	1.06	C-D-E-F-G
	406 x 305 x 152		—	57	27	
A18R126	18.00 x 12.00 x 6.00	A	—	2.25	1.06	C-D-E-F-G
	457 x 305 x 152		—	57	27	
A18R186	18.00 x 18.00 x 6.00	B	—	13.00	1.12	A-B-C-D-E-F-G-H-I
	457 x 457 x 152		—	330	28	
A24R126	24.00 x 12.00 x 6.00	B	—	13.00	1.12	C-D-E-F-G
	610 x 305 x 152		—	330	28	
A24R186	24.00 x 18.00 x 6.00	B	—	13.00	1.12	A-B-C-D-E-F-G-H-I
	610 x 457 x 152		—	330	28	
A24R246	24.00 x 24.00 x 6.00	B	—	13.00	1.12	A-B-C-D-E-F-G-H-I
	610 x 610 x 152		—	330	28	
A8R88	8.00 x 8.00 x 8.00	A	—	2.25	1.06	F-G-H-I
	203 x 203 x 203		—	57	27	
A12R128	12.00 x 12.00 x 8.00	A	—	2.25	1.06	C-D-E-F-G
	305 x 305 x 203		—	57	27	
A15R128	15.00 x 12.00 x 8.00	A	—	2.25	1.06	C-D-E-F-G
	381 x 305 x 203		—	57	27	
A18R128	18.00 x 12.00 x 8.00	A	—	2.25	1.12	C-D-E-F-G
	457 x 305 x 203		—	57	28	
A24R168	24.00 x 16.00 x 8.00	B	—	13.00	1.12	C-D-E-F-G
	610 x 407 x 203		—	330	28	
A18R188	18.00 x 18.00 x 8.00	B	—	13.00	1.12	A-B-C-D-E-F-G-H-I
	457 x 457 x 203		—	330	28	
A24R188	24.00 x 18.00 x 8.00	B	—	13.00	1.12	A-B-C-D-E-F-G-H-I
	610 x 457 x 203		—	330	28	
A24R208	24.00 x 20.00 x 8.00	B	—	13.00	1.12	A-B-C-D-E-F-G-H-I
	610 x 508 x 203		—	330	28	
A24R248	24.00 x 24.00 x 8.00	C	12.19	13.00	1.12	A-B-C-D-E-F-G-H-I
	610 x 610 x 203		310	330	28	
A30R248	30.00 x 24.00 x 8.00	C	15.19	13.00	1.12	A-B-C-D-E-F-G-H-I
	762 x 610 x 203		386	330	28	
A48R368	48.00 x 36.00 x 8.00	C	24.19	33.00	1.50	A-B-C-D-E-F-G-H-I
	1219 x 914 x 203		614	838	38	
A18R1810	18.00 x 18.00 x 10.00	B	—	13.00	1.12	A-B-C-D-E-F-G-H-I
	457 x 457 x 254		—	330	28	
A24R1810	24.00 x 18.00 x 10.00	B	—	13.00	1.12	A-B-C-D-E-F-G-H-I
	610 x 457 x 254		—	330	28	
A24R2410	24.00 x 24.00 x 10.00	C	12.19	13.00	1.12	A-B-C-D-E-F-G-H-I
	610 x 610 x 254		310	330	28	
A30R2410	30.00 x 24.00 x 10.00	C	15.19	13.00	1.50	A-B-C-D-E-F-G-H-I
	762 x 610 x 254		386	330	38	
A24R2412	24.00 x 24.00 x 12.00	C	12.19	13.00	1.12	A-B-C-D-E-F-G-H-I
	610 x 610 x 305		310	330	28	
A30R3012	30.00 x 30.00 x 12.00	C	15.19	27.00	1.50	A-B-C-D-E-F-G-H-I
	762 x 762 x 305		386	686	38	
A36R3012	36.00 x 30.00 x 12.00	C	18.19	27.00	1.50	A-B-C-D-E-F-G-H-I
	914 x 762 x 305		462	686	38	
A36R3612	36.00 x 36.00 x 12.00	C	18.19	33.00	1.50	A-B-C-D-E-F-G-H-I
	914 x 914 x 305		462	838	38	
A30R3016	30.00 x 30.00 x 16.00	C	15.19	27.00	1.50	A-B-C-D-E-F-G-H-I
	762 x 762 x 406		386	686	38	
A48R3616	48.00 x 36.00 x 16.00	C	24.19	33.00	1.50	A-B-C-D-E-F-G-H-I
	1219 x 914 x 406		614	838	38	
A4R44NK	4.00 x 4.00 x 4.00	A	—	1.88	2.00	—
	102 x 102 x 102		—	48	51	
A6R64NK	6.00 x 6.00 x 4.00	A	—	2.25	1.06	—
	152 x 152 x 102		—	57	27	
A8R64NK	8.00 x 6.00 x 4.00	A	—	2.25	1.06	—
	203 x 152 x 102		—	57	27	
A8R84NK	8.00 x 8.00 x 4.00	A	—	2.25	1.06	—
	203 x 203 x 102		—	57	27	
A10R84NK	10.00 x 8.00 x 4.00	A	—	2.25	1.06	—
	254 x 203 x 102		—	57	27	
A12R84NK	12.00 x 8.00 x 4.00	A	—	2.25	1.06	—
	305 x 203 x 102		—	57	27	
A10R104NK	10.00 x 10.00 x 4.00	A	—	2.25	1.06	—
	254 x 254 x 102		—	57	27	
A12R104NK	12.00 x 10.00 x 4.00	A	—	2.25	1.06	—
	305 x 254 x 102		—	57	27	
A12R124NK	12.00 x 12.00 x 4.00	A	—	2.25	1.06	—
	305 x 305 x 102		—	57	27	
A18R184NK	18.00 x 18.00 x 4.00	B	—	13.00	1.12	—
	457 x 457 x 102		—	330	28	
A6R66NK	6.00 x 6.00 x 6.00	A	—	2.25	1.06	—
	152 x 152 x 152		—	57	27	

© 2010 Pentair Technical Products

Screw-Cover Type 3R Boxes and Enclosures

Catalog Number	AxBxC in./mm	Body Style	D in./mm	Mounting H in./mm	Mounting J in./mm	Knockout Pattern
A18R66NK	18.00 x 6.00 x 6.00	A	—	2.25	1.06	—
	457 x 152 x 152		—	57	27	
A8R86NK	8.00 x 8.00 x 6.00	A	—	2.25	1.06	—
	203 x 203 x 152		—	57	27	
A10R86NK	10.00 x 8.00 x 6.00	A	—	2.25	1.06	—
	254 x 203 x 152		—	57	27	
A10R106NK	10.00 x 10.00 x 6.00	A	—	2.25	1.06	—
	254 x 254 x 152		—	57	27	
A12R106NK	12.00 x 10.00 x 6.00	A	—	2.25	1.06	—
	305 x 254 x 152		—	57	27	
A12R126NK	12.00 x 12.00 x 6.00	A	—	2.25	1.06	—
	305 x 305 x 152		—	57	27	
A15R126NK	15.00 x 12.00 x 6.00	A	—	2.25	1.06	—
	381 x 305 x 152		—	57	27	
A16R126NK	16.00 x 12.00 x 6.00	A	—	2.25	1.06	—
	406 x 305 x 152		—	57	27	
A18R126NK	18.00 x 12.00 x 6.00	A	—	2.25	1.06	—
	457 x 305 x 152		—	57	27	
A18R186NK	18.00 x 18.00 x 6.00	B	—	13.00	1.12	—
	457 x 457 x 152		—	330	28	
A24R186NK	24.00 x 18.00 x 6.00	B	—	13.00	1.12	—
	610 x 457 x 152		—	330	28	
A24R246NK	24.00 x 24.00 x 6.00	B	—	13.00	1.12	—
	610 x 610 x 152		—	330	28	
A8R88NK	8.00 x 8.00 x 8.00	A	—	2.25	1.06	—
	203 x 203 x 203		—	1.06	27	
A24R88NK	24.00 x 8.00 x 8.00	A	—	2.25	1.06	—
	610 x 203 x 203		—	1.06	27	
A12R128NK	12.00 x 12.00 x 8.00	A	—	2.25	1.06	—
	305 x 305 x 203		—	57	27	
A15R128NK	15.00 x 12.00 x 8.00	A	—	2.25	1.06	—
	381 x 305 x 203		—	57	27	
A18R128NK	18.00 x 12.00 x 8.00	A	—	2.25	1.12	—
	457 x 305 x 203		—	57	28	
A18R188NK	18.00 x 18.00 x 8.00	B	—	13.00	1.12	—
	457 x 457 x 203		—	330	28	
A24R188NK	24.00 x 18.00 x 8.00	B	—	13.00	1.12	—
	610 x 457 x 203		—	330	28	
A24R208NK	24.00 x 20.00 x 8.00	B	—	13.00	1.12	—
	610 x 508 x 203		—	330	28	
A24R248NK	24.00 x 24.00 x 8.00	C	12.19	13.00	1.12	—
	610 x 610 x 203		310	330	28	
A30R248NK	30.00 x 24.00 x 8.00	C	15.19	13.00	1.12	—
	762 x 610 x 203		386	330	28	
A48R368NK	48.00 x 36.00 x 8.00	C	24.19	33.00	1.50	—
	1220 x 915 x 203		614	838	38	
A24R2410NK	24.00 x 24.00 x 10.00	C	12.19	13.00	1.12	—
	610 x 610 x 254		310	330	28	
A24R2412NK	24.00 x 24.00 x 12.00	C	12.19	13.00	1.12	—
	610 x 610 x 305		310	330	28	
A30R3012NK	30.00 x 30.00 x 12.00	C	15.19	27.00	1.50	—
	762 x 762 x 305		386	686	38	
A36R3012NK	36.00 x 30.00 x 12.00	C	18.19	27.00	1.50	—
	914 x 762 x 305		462	686	38	
A36R3612NK	36.00 x 36.00 x 12.00	C	18.19	33.00	1.50	—
	914 x 914 x 305		462	838	38	
A30R3016NK	30.00 x 30.00 x 16.00	C	15.19	27.00	1.50	—
	762 x 762 x 406		386	686	38	
A48R3616NK	48.00 x 36.00 x 16.00	C	24.19	33.00	1.50	—
	1219 x 915 x 406		614	838	38	

© 2010 Pentair Technical Products

Screw-Cover Type 3R Boxes and Enclosures

Body Style A

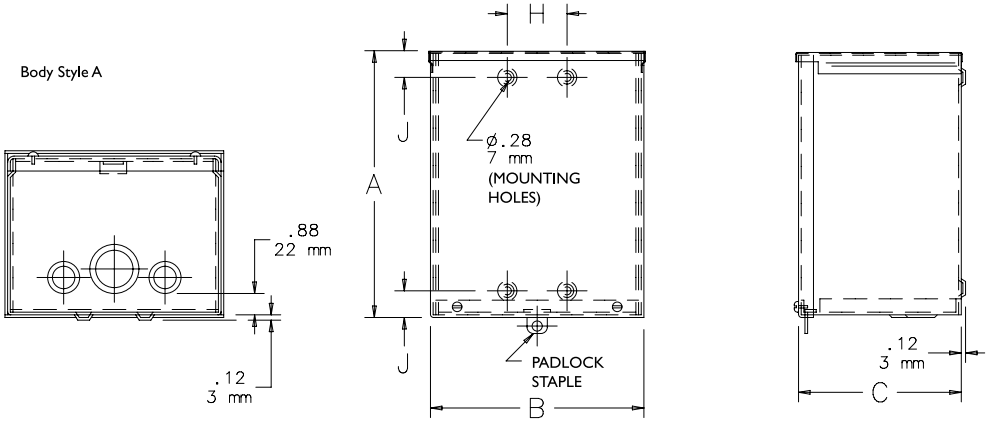

Body Style B

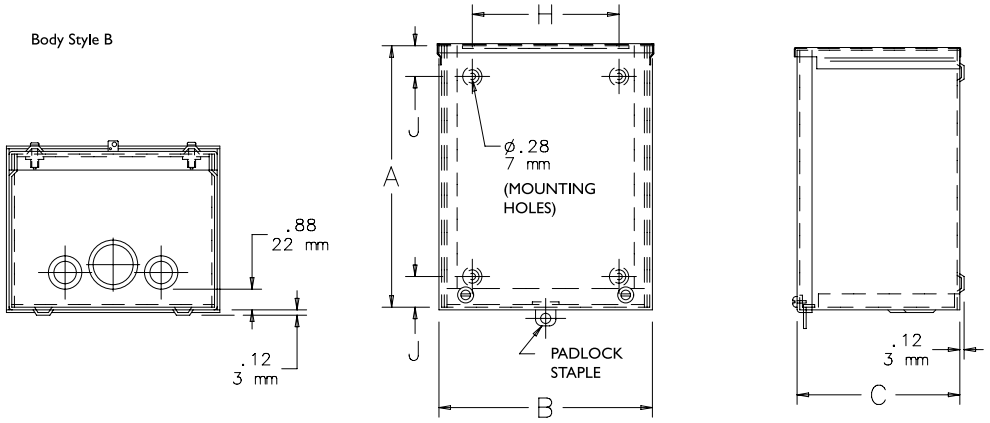

Body Style C

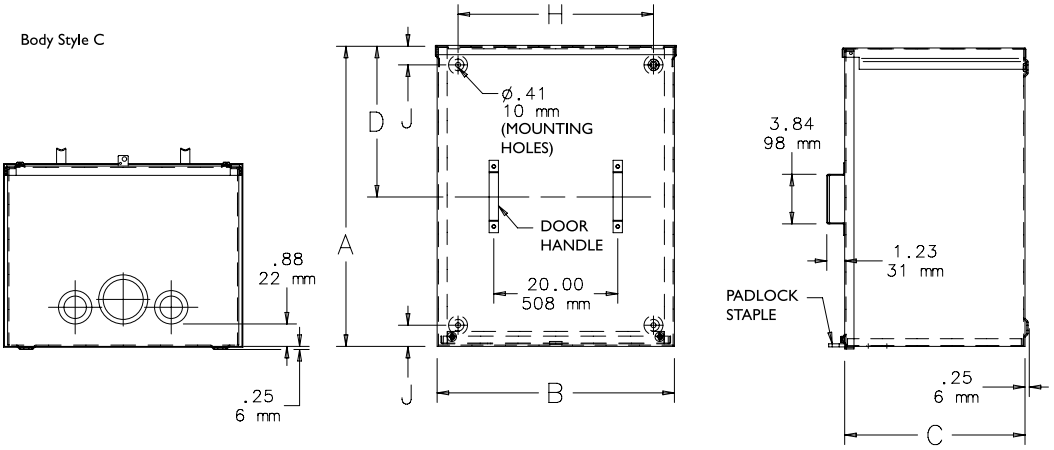

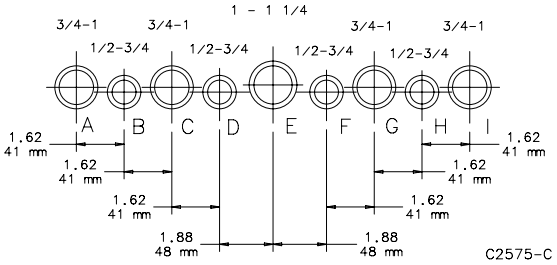

Subject to change without notice PH (763) 422-2211 • FX (763) 422-2600 • hoffmanonline.com © 2010 Pentair Technical Products
Spec-00263 D