Model 38-1053-ADPDOOR-AP105

Retrofit Doors

Oberon's Model 1053-00 wireless LAN access point enclosure is a locking 2' x 2' ceiling tile enclosure originally designed for the Cisco 1250 series wireless access points. For customers making the migration to the Aruba Networks AP105 802.11n wireless access point, Oberon has designed the 38-1053-ADPDOORAP105 adaptor door so that customers may install the new access point in the existing enclosure, without removing the enclosure from the ceiling. The upgrade simply requires that the existing 1053-00 door is removed (three interior nuts), the new access point is attached to the adaptor door, and the adaptor door is attached to the enclosure. The upgrade maintains the enclosure's UL 50 design criteria, and provides the same level of physical security as previously provided. Upgrades are performed without accessing the air handling space above the ceiling.

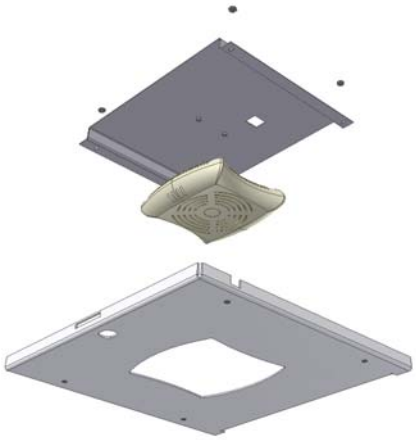

1) Model 1053-AP105 shown with Aruba Networks AP105 access point (not included) 2) Exploded view of the door, access point, and bracket

Specifications:

- Adaptor door designed to mount the Aruba Networks AP105 802.11n wireless access point into existing Oberon Model 1053-00 ceiling tile enclosures
- With adaptor door properly installed, the assembly is UL listed and designed to meet NEC300-22 and 300-23 for plenum installations
- Construction: Textured white powder-coated steel, 14 ga. door
- Fully hinged locking door, keyed alike.
- Adaptor door is attached to enclosure with (3) nuts

Model 38-1053-ADPDOOR-AP105 Includes:

- Adaptor door
- Assembly mount bracket and nuts
- Installation instructions