AMP NETCONNECT* Standard, Angled, and Low Profile Flush-Mount Faceplate Kits

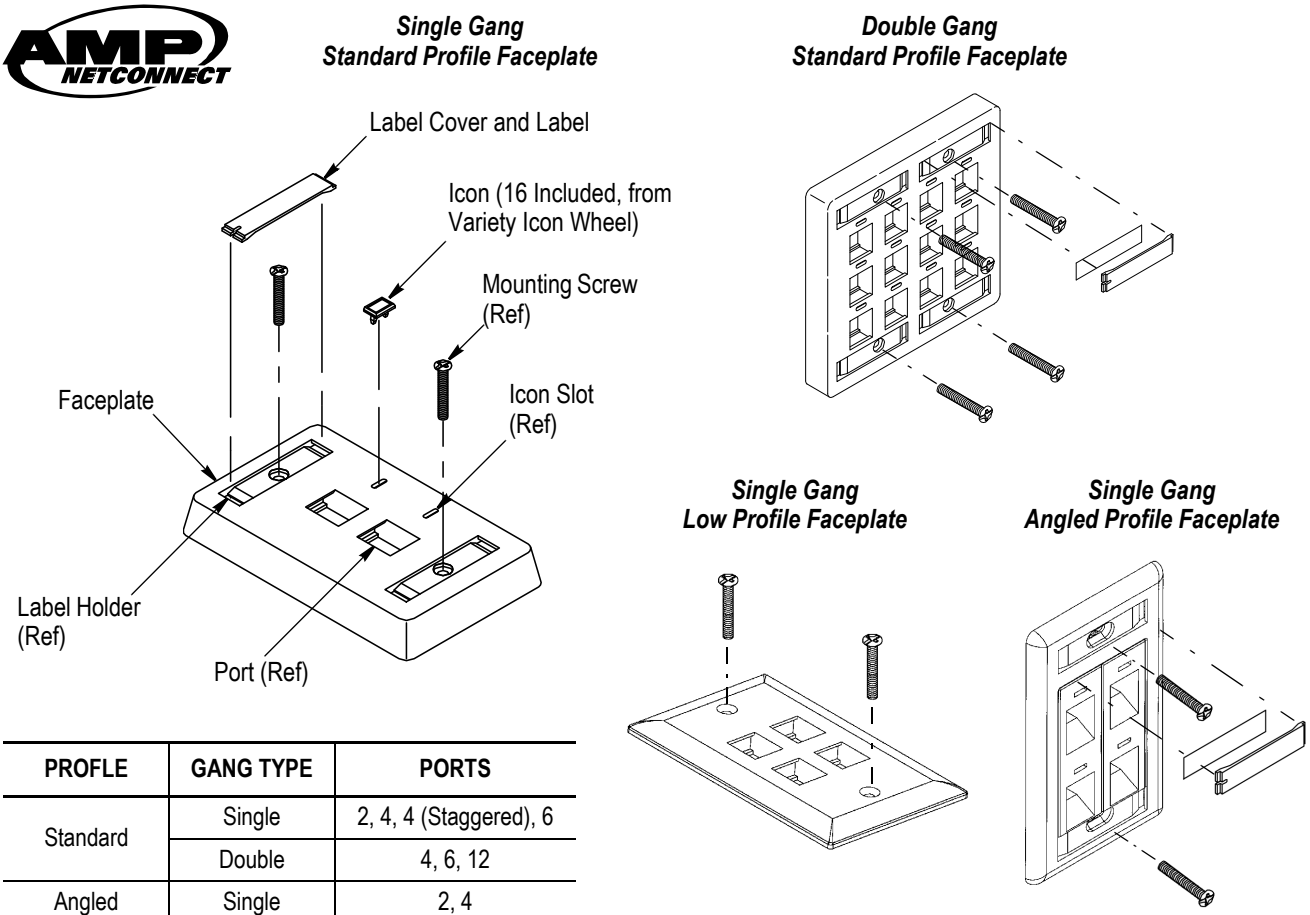

PROFLE	GANG TYPE	PORTS
Standard	Single	2, 4, 4 (Staggered), 6
	Double	4, 6, 12
Angled	Single	2, 4
Low	Single	1, 2, 3, 4, 6

Figure 1

1. INTRODUCTION

This instruction sheet provides the assembly procedure for standard, angled, and low profile flush-mount faceplate kits. Refer to Figure 1 for gang types and number of ports. The faceplates will accept various combinations of 110Connect and SL Series modular jacks, MT-RJ outlet jacks, and 110Connect and SL Series multi-media inserts.

NOTE

These faceplates will NOT accept AMP-BARREL jacks. For other types of jacks, call PRODUCT INFORMATION at the bottom of this page for compatibility.*

To obtain information on AMP NETCONNECT products, call PRODUCT INFORMATION at the number at the bottom of this page or visit the AMP NETCONNECT website at www.ampnetconnect.com.

Reasons for reissue of this instruction sheet are provided in Section 6, REVISION SUMMARY.

2. DESCRIPTION

Each faceplate kit consists of a faceplate and mounting screws. The standard and angled profile faceplate kits also include a paper label and clear label cover. A variety icon wheel is included with the standard faceplate kit. See Figure 1.

3. ASSEMBLY PROCEDURE

1. Terminate the modular jack or multi-media insert to the cable ends according to the instructions packaged with the jack or insert.

2. Align the modular jack or insert with the back of the faceplate so that the deflecting latch faces the off-set latch located on the back of the faceplate. Refer to Figure 2.

AMP NETCONNECT logo is a trademark of TE Connectivity.

©2011 Tyco Electronics Corporation, a TE Connectivity Ltd. Company
All Rights Reserved
*Trademark

TE Connectivity, TE connectivity (logo), and TE (logo) are trademarks. Other logos, product and/or Company names may be trademarks of their respective owners.

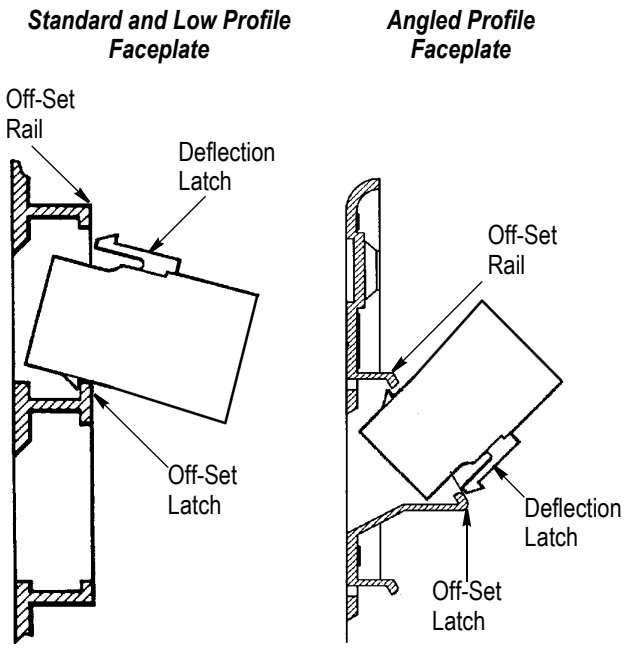

Figure 2

3. Insert the modular jack or insert at a slight angle into the port and pivot it forward until the deflection latch engages into the off-set rail and snaps into place.

4. Repeat these steps for remaining jacks and inserts.

5. If included, remove the icons from the icon wheel, and insert them into the icon slots of the faceplate.

6. If included, mark the label, and insert the label into the label holder of the faceplate. Install the label cover onto the label holder.

4. REMOVAL

To remove the modular jack or insert, proceed as follows:

1. Insert a screwdriver tip over the deflectable latch of the jack or insert, and rotate it slightly to release the deflectable latch. Refer to Figure 3.

2. Pull the jack or insert out of the back of the faceplate.

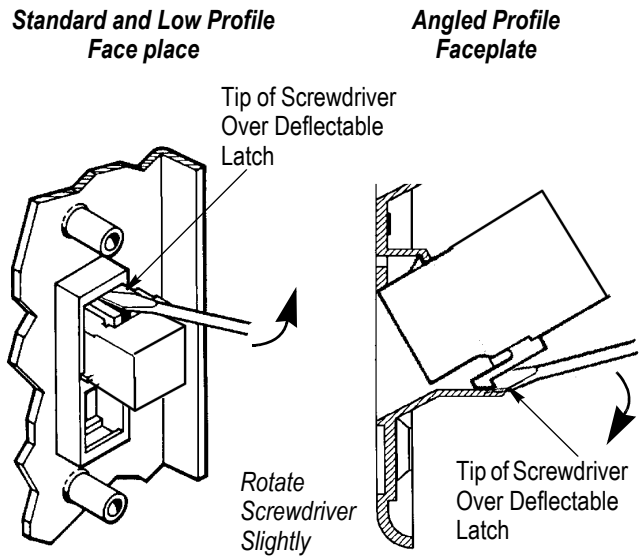

Figure 3

5. REPLACEMENT AND REPAIR

The components of the faceplate kits are not repairable. DO NOT use defective or damaged products.

6. REVISION SUMMARY

Revisions to this instruction sheet include:

- Changed company logo
- Added screws, label, and label cover to standard profile faceplate in Figure 1
- Modified NOTE in Section 1
- Removed list of faceplate colors
- Added Steps 5 and 6 to Section 3
- Replaced “pry down” with “rotate” in Section 4, and added arrows to Figure 3
- Added Section 5