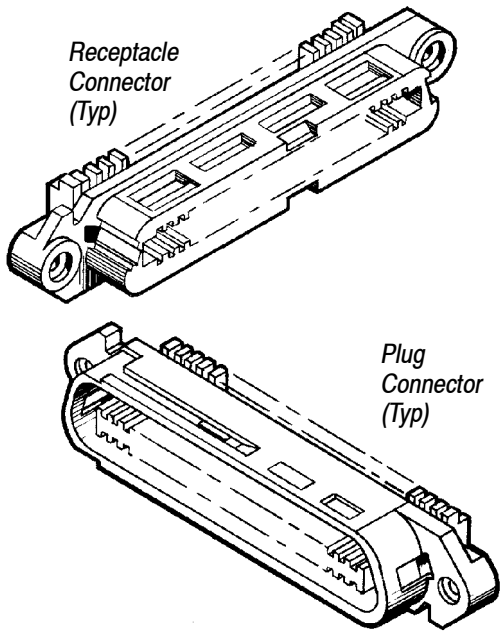

Figure 1

1. INTRODUCTION

This instruction sheet covers the selection and installation of strain relief hardware for cable-to-cable and cable-to-panel CHAMP Connectors. Read this and all referenced material before starting assembly.

NOTE

Dimensions in this instruction sheet are in millimeters [with inches in brackets]. Figures are for reference only and are not drawn to scale.

Reasons for reissue are provided in Section 5, REVISION SUMMARY.

2. DESCRIPTION

Strain relief hardware can be selected from the tables in Figures 2 and 3. Determine what connector is to be used and what application is required.

3. SELECTING AND INSTALLING STRAIN RELIEF

Strain reliefs are designed for cable and discrete wire applications where the stress is NOT placed on the conductors (e.g., when the cable bundle itself is secured and the connector is concealed - preventing inadvertent movement of the conductors).

1. Determine the number of positions in the connector. Refer to the table in Figure 2 and select the applicable strain relief.
2. Position the first half on the connector as shown in Figure 2.
3. Hold the first half in position and align the second half with the connector.
4. Make sure the locking latches are aligned with the locking tabs, then press the second half onto the connector until the locks engage.

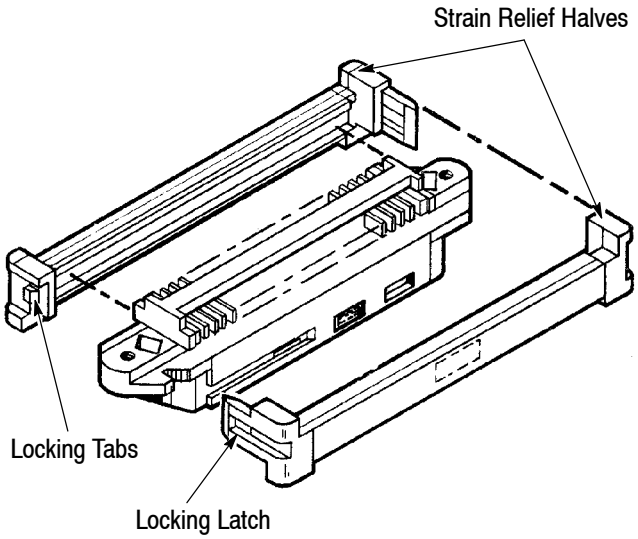

CONNECTOR POSITION	STRAIN RELIEF PART NUMBER
24	1-552298-1
36	1-552297-1
50	1-552027-1
64	1-552296-1

Figure 2

4. SELECTING AND INSTALLING STRAIN RELIEF COVERS

Five styles of strain relief covers are available:

- 90° one-piece tapered
- 90° one-piece straight
- 90° two-piece standard profile
- 90° two-piece low profile
- 180° two-piece

NOTE

The degrees indicate the cable exit in relation to the mating face of the connector.

Determine the number of contact positions, the degree of cable exit, and the cable diameter of your application. Refer to columns 4 and 5 of Figure 3 for the applicable paragraph in the following text for installation procedures.

©2011 Tyco Electronics Corporation, a TE Connectivity Ltd. Company
All Rights Reserved
TE logo is a trademark.
*Trademark. Other product names, logos, or company names might be trademarks of their respective owners.

CONNECTOR ASSEMBLY			STRAIN RELIEF COVER	
CONT POSN	CABLE EXIT	CABLE DIA	DESCRIPTION	PART NO.
14	90°	4.70-5.84 [.185-.230]	90° Two-Piece Low Pf	552412-1
		6.10-7.62 [.240-.300]	90° Two-Piece Low Pf	1-552412-1
	180°	4.44-5.59 [.175-.220]	180° Two-Piece	552079-1
		5.59-6.73 [.220-.265]	180° Two-Piece	1-552079-1
		6.73-7.87 [.265-.310]	180° Two-Piece	2-552079-1
24	90°	6.10-7.62 [.240-.300]	90° Two-Piece Low Pf	552413-1
		7.87-9.14 [.310-360]	90° Two-Piece Low Pf	1-552413-1
	180°	7.11-8.13 [.280-.320]	180° Two-Piece	1-552076-1
		8.13-9.65 [.320-.380]	180° Two-Piece	2-552076-1
36	90°	7.87-9.14 [.310-.360]	90° Two-Piece Low Pf	552414-1
	180°	7.37-8.64 [.290-.340]	180° Two-Piece	552073-1
50	90°	7.62-8.26 [.300-.325]	90° Taper	229909-1
			90° Straight	552617-1
			Cable Clamp for All	3-229910-1
		7.62-10.16 [.300-.400]	90° Straight	552617-1, -4
			Cable Clamp for Str	552618-4
		8.26-9.40 [.325-.370]	90° Straight	229909-1
			90° Straight	552617-1
			Cable Clamp for All	3-229910-1
		8.64-10.16 [.340-.400]	90° Two-Piece Std Pf	1-552011-1
			90° Two-Piece Low Pf	552014-1
		8.89-10.80 [.350-.425]	90° Taper	229909-1
			90° Straight	552617-1
			Cable Clamp for Str	229910-1
			Kit for Taper	552560-1
		10.54-11.81 [.415-.465]	90° Two-Piece Std Pf	552011-1
		10.80-12.7 [.425-.500]	90° Taper	229909-1
			90° Straight	552617-1
			Cable Clamp for All	1-229910-1
			Kit for Taper	552560-5

Figure 3 (cont'd)

CONNECTOR ASSEMBLY			STRAIN RELIEF COVER	
CONT POSN	CABLE EXIT	CABLE DIA	DESCRIPTION	PART NO.
50	90°	12.7-13.97 [.500-.550]	90° Taper	229909-1
			90° Straight	552617-1
			Cable Clamp for All	4-229910-1
	180°	8.38-10.92 [.330-.430]	180° Two-Piece	3-552008-1
		10.92-12.45 [.430-.490]	180° Two-Piece	552008-1
		12.45-13.97 [.490-.550]	180° Two-Piece	4-552008-1
64	90°	10.41-12.06 [.410-.475]	90° Two-Piece Std Pf	552496-1
		12.06-13.72 [.475-.540]	90° Two-Piece Std Pf	1-552496-1
		13.72-15.37 [.540-.605]	90° Two-Piece Std Pf	2-552496-1
	180°	12.19-13.72 [.480-.540]	180° Two-Piece	552082-1

†A dash one (-1) suffix signifies black and a dash four (-4) signifies gray.

Figure 3 (end)

4.1. 90° Slide-On Covers (50-Position Only)

Tapered - Designed for cable-to-cable applications within a cable diameter range of 7.62-12.7 [.300-.500].

Straight - Designed for multi-jack adapter and cable-to-cable applications within a cable diameter range of 7.62-12.7 [.300-.500].

Straight (Ratchet Style) - Designed for cable-to-cable applications with a cable diameter up to 10.80 [.425] maximum. Strain relief snaps into cover by use of mating ratchet teeth on strain relief and cover. Recommended for use with CHAMP-LOK* Connector Locking Latch 552723-1.

NOTE

When installing 90° covers, the wires MUST be dressed to opposite ends of the plug and receptacle connectors. (Dress plug wires toward contacts numbered 1 and 26, and dress receptacle wires toward contacts numbered 25 and 50.

Install as follows:

1. Grip the connector firmly with one hand, then draw the other hand over the wire and towards the proper end of the connector - forming the wires as indicated in Figure 4. Do NOT overwork the wires.

2. Align the terminated contacts with the contact groove in the cover.

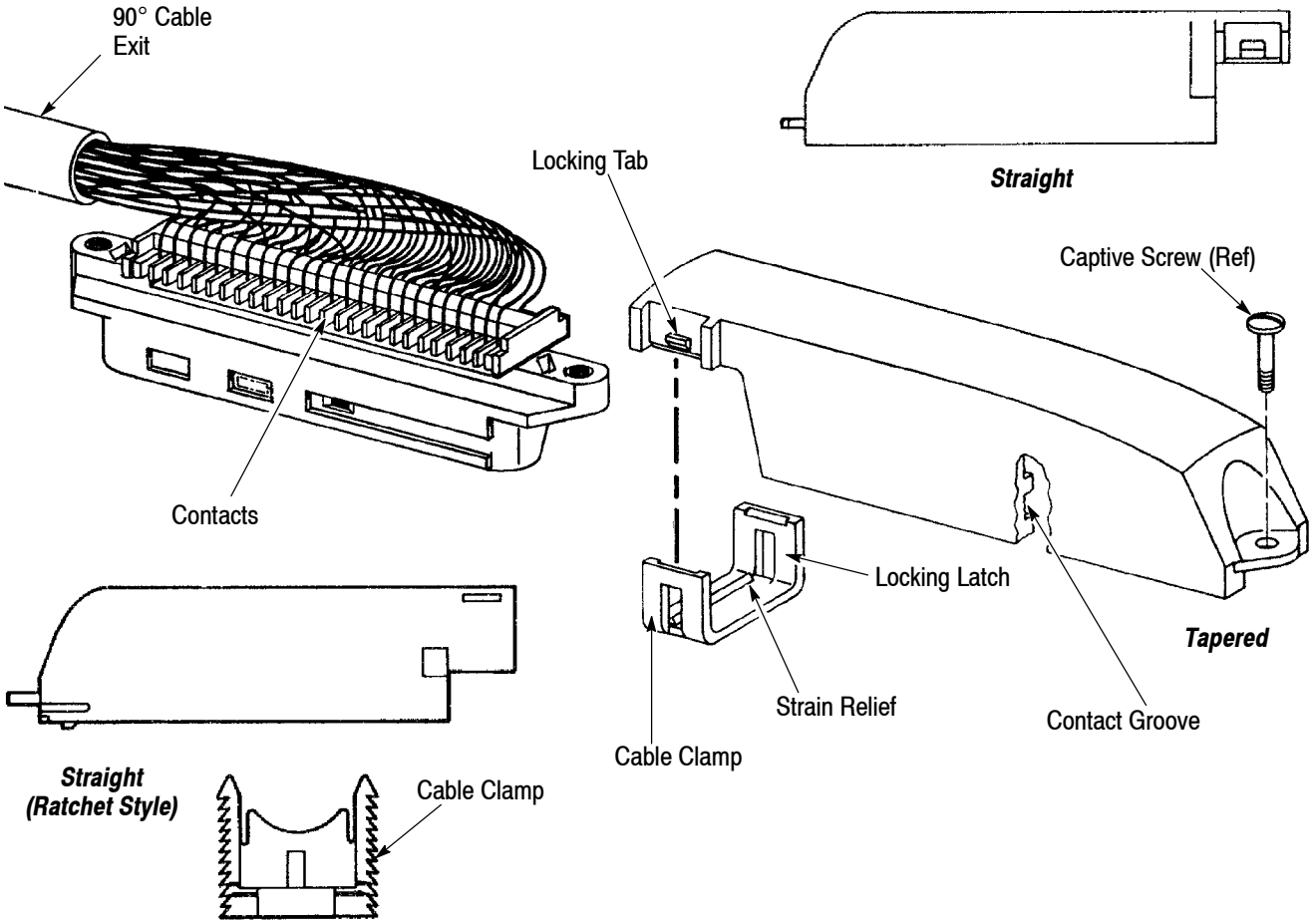

Figure 4

3. While observing the wires, slide the cover onto the connector until bottomed. Do NOT pull wires.

4. Make sure the cable sheathing is located in the strain relief of the cover.

5. Install the strain relief clamp on the cover with your hand or a suitable pair of parallel pliers. Make sure the locking latches engage the locking tabs.

4.2. 90° Two-Piece Covers

Standard – Designed for cable-to-cable and cable-to-panel applications.

Low Profile – Designed for cable-to-cable and cable-to-panel applications where height is a concern.

Install as follows:

1. Grip the connector firmly with one hand, then draw the other hand over the wires and toward the proper end of the connector – forming the wires as indicated in Figure 5. Do NOT overwork the wires.

2. Position the half with the locking latches on the terminated connector. Make sure the contacts enter the contact groove, and the wires will fit inside the cover.

3. Make sure the cable sheathing is located in the strain relief of the cover.

4. Align the second half of the cover with the first, then press it onto the connector until the locking latches engage the locking tabs (a pair of parallel pliers may be required to close the strain relief).

4.3. 180° Two-Piece Covers

NOTE

There are two methods of placing the wires inside the 180° cover. The one used will depend on the terminated cable bundle in relation to the connector. If the cable bundle is located at one end (standard tooling) use Method 1, if the cable bundle is located in the center (MI-1 tool with loose combs) use Method 2.

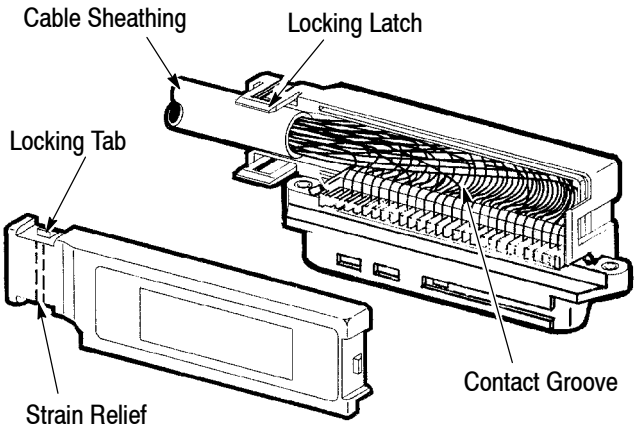

Figure 5

A. Method 1

1. Gather the wires at the end of the connector that is nearest to the cable bundle. See Figure 6.

2. Place the cover half with the locking latches on one side of the connector, and make sure the contacts enter the contact groove.

3. Press the wires (at connector end) into the cover and hold them there with your thumb.

4. Fold the cable bundle to the other end of the connector and again press the wires into the cover with your thumb.

5. Hold the wires in the cover half and fold the cable bundle to the middle of the cover and out through the strain relief.

6. Make sure the wires will fit inside the cover, and the cable sheathing is in the strain relief.

7. Align the second half of the cover with the first half, then press it on to the connector until the locking latches engage the locking tabs (a pair of parallel pliers may be required to close the strain relief).

B. Method 2

1. Gather the wires together at the center of the connector.

2. Place the cover half with the locking latches on one side of the connector, and make sure the contacts enter the contact groove. See Figure 6.

3. Fit the wires inside the cover, and the cable sheathing in the strain relief.

4. Align the second half of the cover with the first half, then press it onto the connector until the locking latches engage the locking tabs (a pair of parallel pliers may be required to close the strain relief).

5. REVISION SUMMARY

Since the previous revision of this document, the following changes were made:

- Updated document to corporate requirements

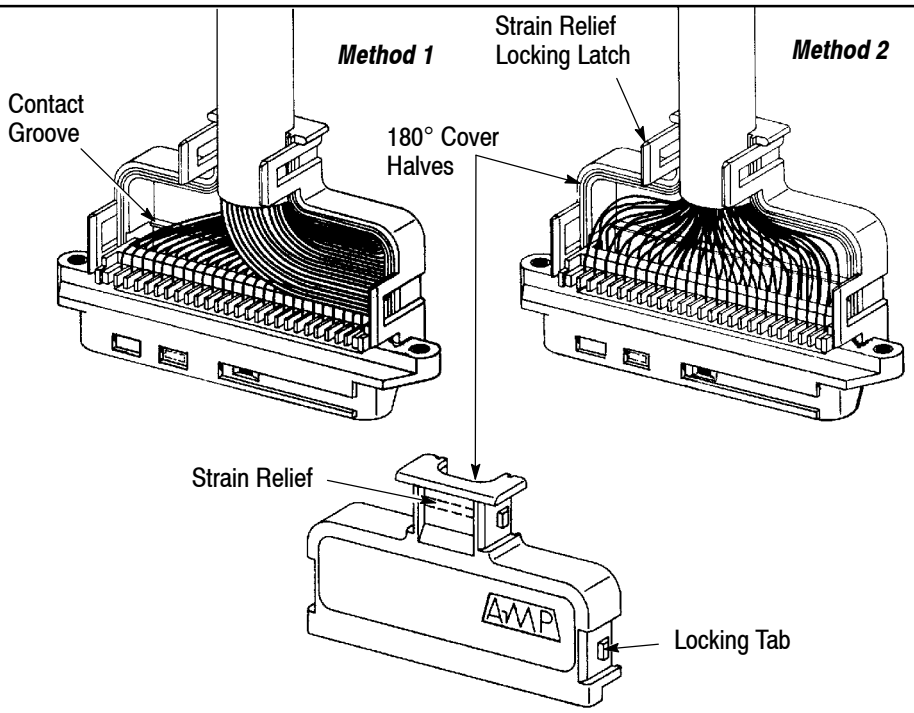

Figure 6