FOR USE WITH **PANDUIT**
SURFACE RACEWAY
ROUTING SYSTEM

TYPE WCM35 RACEWAY SYSTEM

Panduit Part Numbers: WCM35T & WCM35TI

INSTALLATION INSTRUCTIONS

Panduit Corp. 2002

Printed in U.S.A.

TEE FITTING

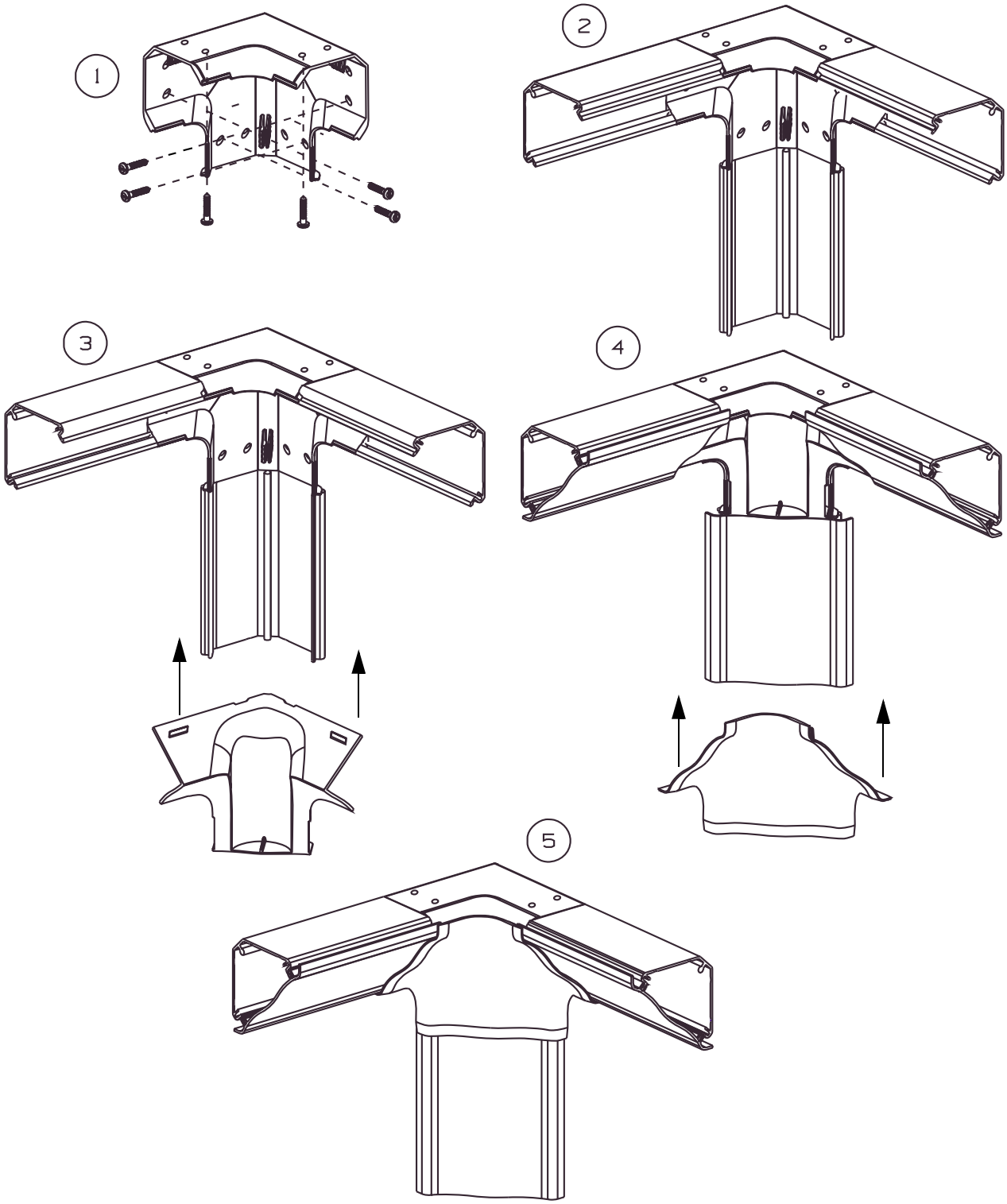

For Technical Assistance, call: **866-405-6656**

INSERT BREAKOUTS

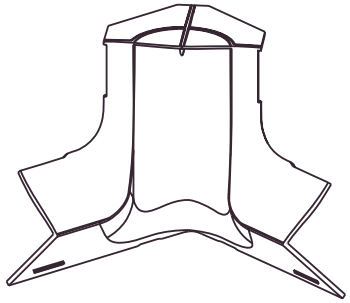

WCM35TI

OPTION A

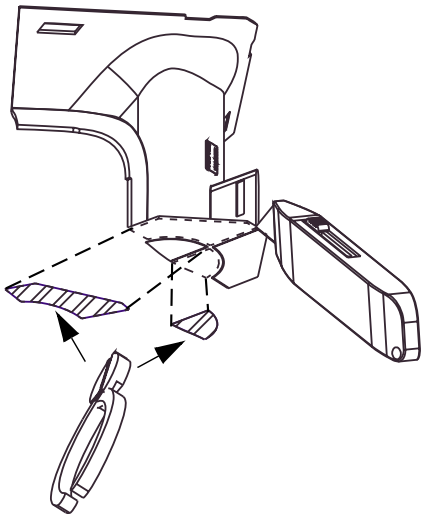

OPTION B

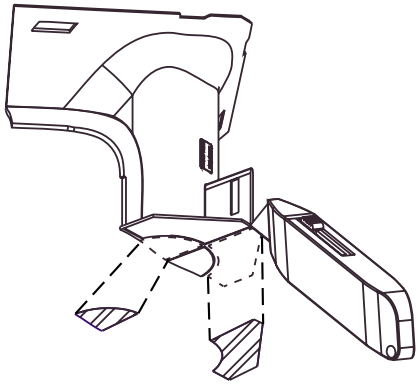

INSERT ROUTING

OPTION A

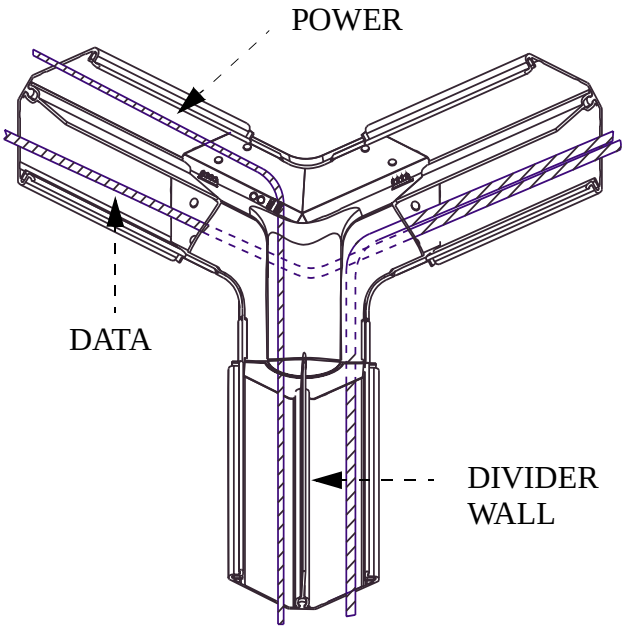

OPTION B

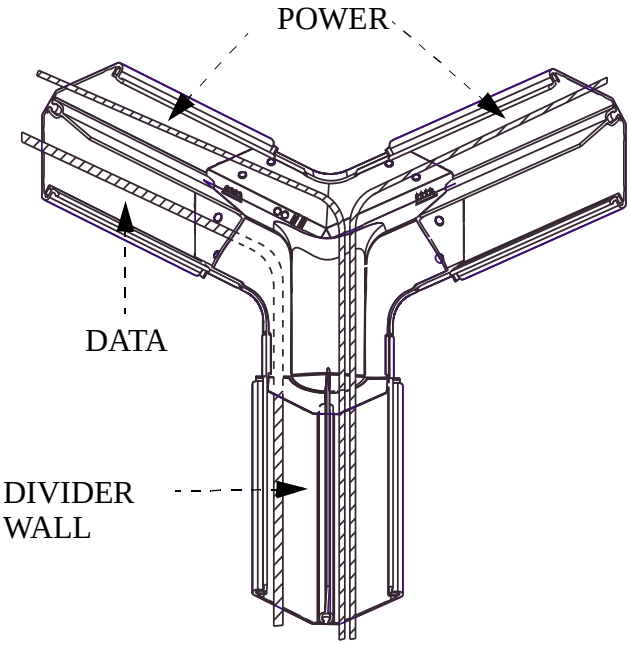

INSTRUCTION SHEET RW174

WORLDWIDE SUBSIDIARIES AND SALES OFFICES

17301 Ridgeland Avenue
Tinley Park, Il. 60477-3091
Web Site: www.panduit.com/ncg

PANDUIT
RACEWAY SYSTEMS DIVISION

Technical Support: 866-405-6656
Fax: 866-449-1702
Email: netconnsupport@panduit.com