THIS COPY IS PROVIDED ON A RESTRICTED BASIS AND IS NOT TO BE USED IN ANY WAY DETRIMENTAL TO THE INTERESTS OF PANDUIT CORP.

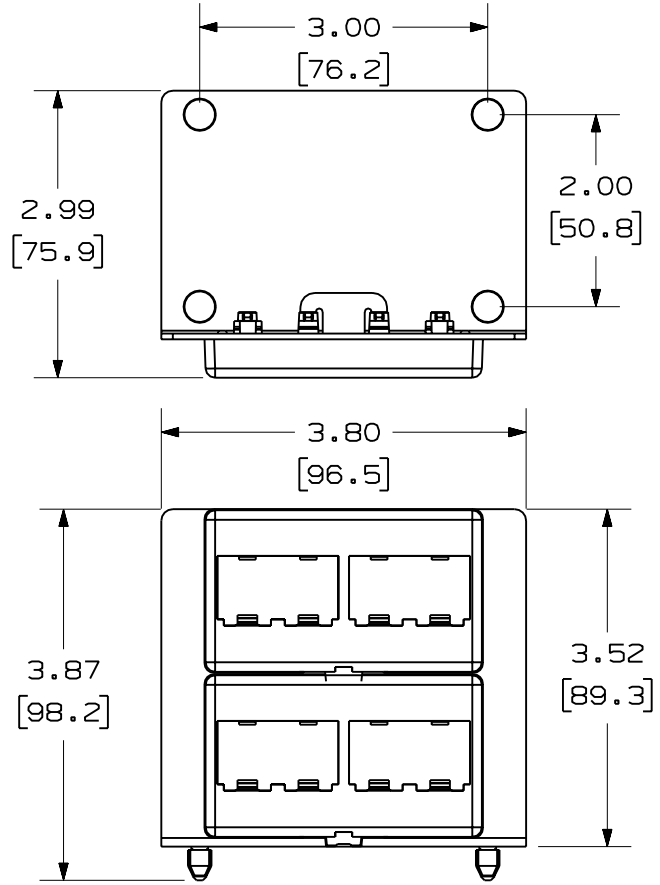

PANDUIT P/N	WEIGHT
MS8PP	.30 LB/EACH PC (136.0 g/EACH PC)

NOTES:
1. SEE CURRENT CATALOG FOR ADDITIONAL PART NUMBER SUFFIXES TO INDICATE COLOR AND OR PACKAGE QUANTITY.
2. SEE CATALOG FOR COMPLETE LIST OF PARTS APPLICABLE FOR USE WITH THIS PART.
3. DIMENSIONS IN [ ] ARE IN METRIC.
4. PART INCLUDES:
   1- MODULAR PATCH PANEL MODULE

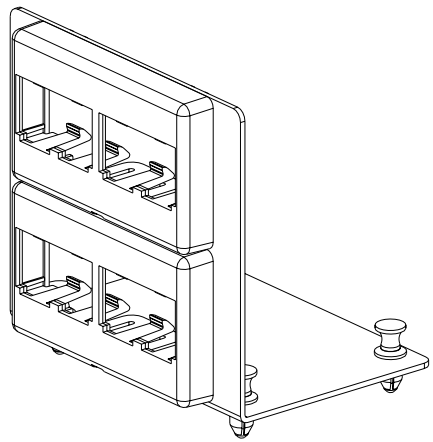

REV	DATE	BY	CHK	DESCRIPTION	ECN - R	CUST	SUP	OTH
R	11-19-07	JsP		RELEASED TO PRODUCTION	02695-105			

M02695ZB_MINICOM_PP_ASSY_00.PRT

DRAWING FILENAME M02695ZB_DC_00A.PRT

SIZE A

MEDIA DISTRIBUTION MINI-COM MODULAR PATCH PANEL CUSTOMER DRAWING

PANDUIT™ CORP.
TINLEY PARK, ILL 60477

THIRD ANGLE PROJECTION

ALL DIMENSIONS ARE GIVEN IN INCHES, UNLESS OTHERWISE SPECIFIED.
DIMENSIONAL TOLERANCES ARE:
(.X) ± (.XXX) ± .010(.3)
(.XX) ±.03(.8) ANGLES ±

DRAWN BY JsP
DATE 11-19-07
CHK'D

MATERIAL:
BRACKET- 16 GAGE C.R.S.
FACEPLATE- ABS

I.I. NUMBER N/A
PRODUCT SPEC N/A
WORK INSTRUCTION N/A
SCALE NONE
PART NO. MS8PP
DRAWING NO. 02695-105