THIS COPY IS PROVIDED ON A RESTRICTED BASIS AND IS NOT TO BE USED IN ANY WAY DETRIMENTAL TO THE INTERESTS OF PANDUIT CORP.

| PANDUIT PART NUMBER | COLOR | WEIGHT (APPROX) |
|---|---|---|
| QPPLD6-X | RED | 0.034LB [15.6 g] |

NOTES:
1. SEE CURRENT CATALOG FOR VARIOUS APPLICATIONS.
2. THE LOCK-IN DEVICE IS DESIGNED FOR QPP6** SIX-POSITION PLUG PACKS.
3. DIMENSIONS IN BRACKETS ARE IN METRIC.
4. PACKAGE CONTAINS TEN LOCK-IN DEVICES.
5. TWO LOCK-IN DEVICES ARE RECOMMENDED TO LOCK-IN ONE QPP6** SIX-POSITION PLUG PACK.

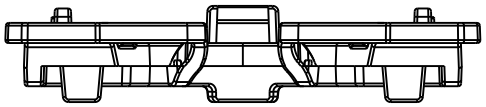

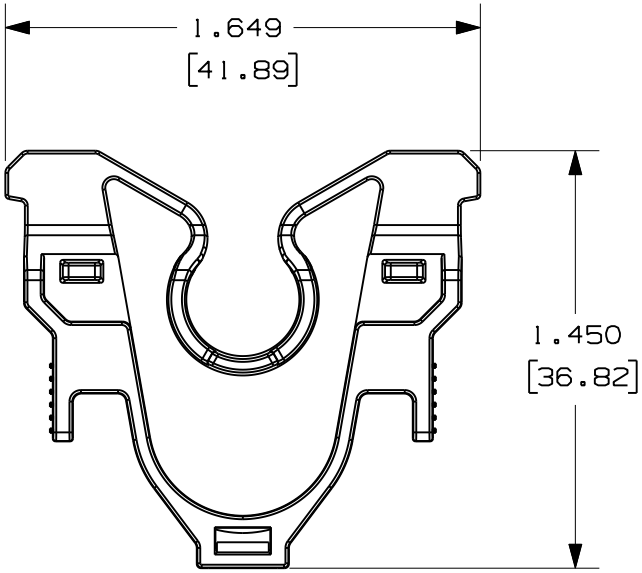


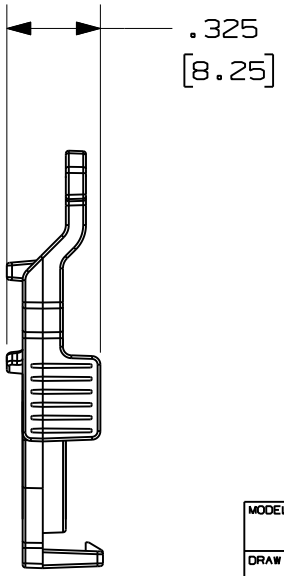


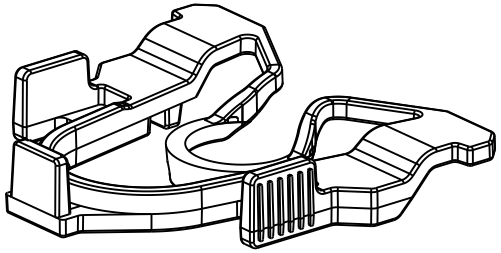

| | | | | | | | | | |
|---|---|---|---|---|---|---|---|---|---|
| R | 1-30-08 | MDJr | | RELEASED FOR PRODUCTION | 02802-30 | | | | |
| REV | DATE | BY | CHK | DESCRIPTION | ECN - R | CUST | SUP | OTH | |

MODEL FILENAME: M02802CS_LVR_LOCK_OUT_CLIP_08

DRAWING FILENAME: M02802CS_DC30_08A.PRT

SIZE: A

QUICKNET 6 POSITION PLUG PACK
LOCK-IN DEVICE CUSTOMER DRAWING

PANDUIT™ CORP.
TINLEY PARK, ILL 60477

THIRD ANGLE PROJECTION

ALL DIMENSIONS ARE GIVEN IN INCHES, UNLESS OTHERWISE SPECIFIED.
DIMENSIONAL TOLERANCES ARE:
(.X) ±.03 (.XXX) ±.005
(.XX) ±.01 ANGLES ± 1°

DRAWN BY: MDJr
DATE: 10/23/07
CHK'D:
REVIEW DRAWING NUMBERS:
MAT'L: POLYCARBONATE

I.I. NUMBER:
PRODUCT SPEC/ PKG SPEC:
ASSY METHOD/ TEST METHOD:
SCALE: 1.5 TO 1
PART NO.: QPPLD6-X
DRAWING NO.: 02802-30