THIS COPY IS PROVIDED ON A RESTRICTED BASIS AND IS NOT TO BE USED IN ANY WAY DETRIMENTAL TO THE INTERESTS OF PANDUIT CORP.

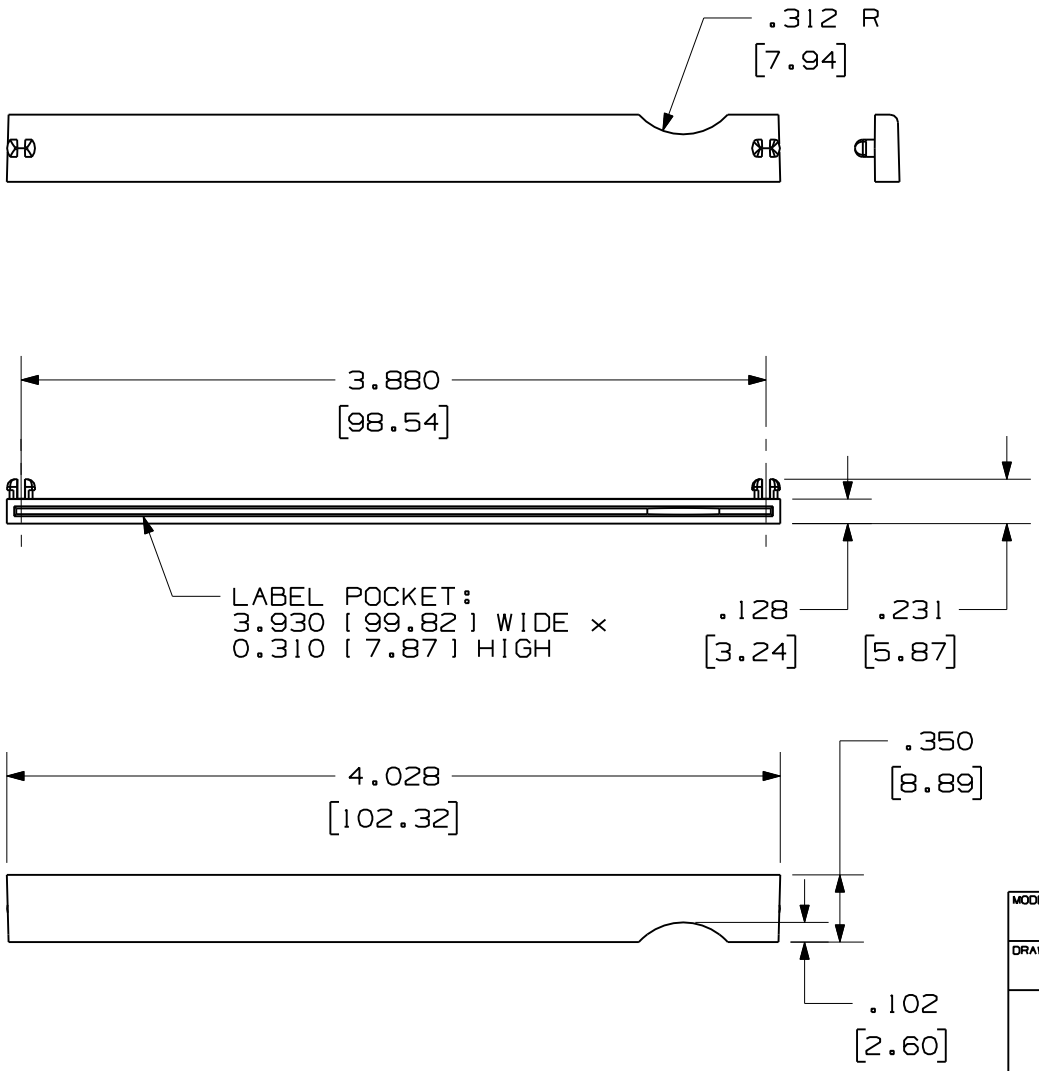

PANDUIT PART NUMBER	WEIGHT (APPROX.)
QPPLC24	0.005 LBS(2.4g)

NOTES:
1. SEE CURRENT CATALOG FOR VARIOUS APPLICATIONS.
2. THE LABEL HOLDER IS DESIGNED FOR USE WITH QPP24BL AND QAPP24BL QUICKNET PATCH PANELS.
3. USE WITH THE FOLLOWING RECOMMENDED PANDUIT LABELS:
   C390X030Y16 (THERMAL TRANSFER)
   C390X030Y1J (LASER/INKJET)
   C390X030Y1C (THERMAL TRANSFER)
4. DIMENSIONS SHOWN IN BRACKETS ARE IN METRIC.

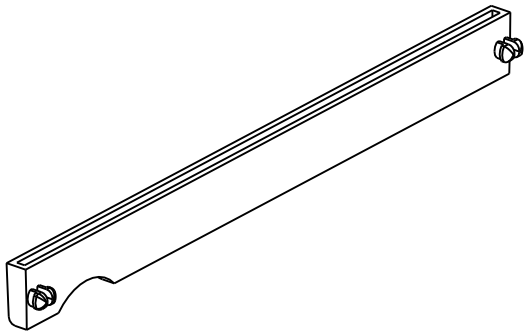

MODEL FILENAME: M02582BU_SIX_POS_LABEL_HOLDER_03.PRT
DRAWING FILENAME: M02582BU_DC47_03A.PRT
SIZE: A

QUICKNET LABEL HOLDER CUSTOMER DRAWING

PANDUIT™ CORP.
TINLEY PARK, ILL 60477

I.I. NUMBER:
PRODUCT SPEC/ PKG SPEC:
ASSY METHOD/ TEST METHOD:

THIRD ANGLE PROJECTION

ALL DIMENSIONS ARE GIVEN IN INCHES, UNLESS OTHERWISE SPECIFIED.
DIMENSIONAL TOLERANCES ARE:
(.X) ±.03 (.XXX) ±.005
(.XX) ±.01 ANGLES ± 1°

SCALE: FULL
DRAWN BY: MDJr 1-31-07
REVIEW DRAWING NUMBERS:
PART NO.: QPPLC24
DATE:
MAT'L: CLEAR POLYCARBONATE
DRAWING NO.: 02582-47
CHK'D: WFMI

REV	DATE	BY	CHK	DESCRIPTION	ECN - R	CUST	SUP	OTH
R	3-15-07	MDJr	WFMI	RELEASED TO PRODUCTION	02582-47	TRW		