THIS COPY IS PROVIDED ON A RESTRICTED BASIS AND IS NOT TO BE USED IN ANY WAY DETRIMENTAL TO THE INTERESTS OF PANDUIT CORP.

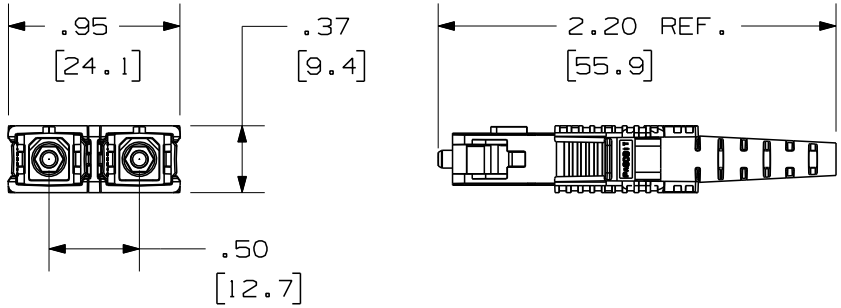

ABOVE VIEWS SHOWN WITHOUT DUSTCAPS

PANDUIT PART NUMBER	ACCEPTS FIBER TYPE	WEIGHT
FSCDM	50/125um MULTIMODE	86.4g/10 pcs [3.05 oz/10 pcs]
	50/125um OM3 MULTIMODE	86.4g/10 pcs [3.05 oz/10 pcs]
	62.5/125um MULTIMODE	86.4g/10 pcs [3.05 oz/10 pcs]

NOTES:
1. SEE CATALOG FOR ADDITIONAL PART NUMBER SUFFIXES TO INDICATE COLOR AND/OR PACKAGE QUANTITY.
2. ACCEPTS 50/125um, 62.5/125um OR 50/125 OM3 MULTIMODE, 900um BUFFERED GLASS OPTICAL FIBER.
3. FULLY COMPLIES WITH THE FIBER OPTIC CONNECTOR PERFORMANCE REQUIREMENTS AS SPECIFIED BY TIA/EIA-568-B.3.
4. MATERIAL:
   BODY/HARDWARE: PLASTIC
   BOOT: THERMOPLASTIC RUBBER
   FERRULE: ZIRCONIA CERAMIC
5. DIMENSIONS IN BRACKETS ARE METRIC [mm].
6. 1.6/2.0mm AND 900um BOOTS ARE AVAILABLE.

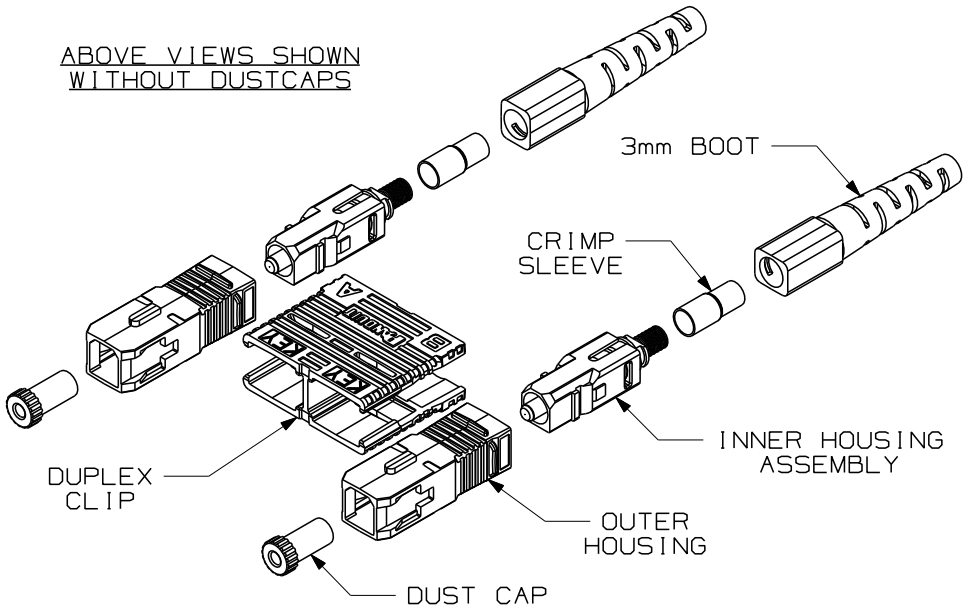

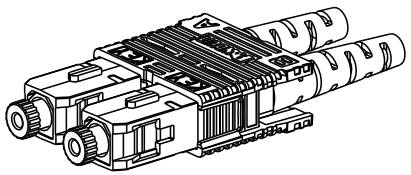

REV	DATE	BY	CHK	DESCRIPTION	ECN - R	CUST	SUP	OTH
1	06-23-06	MC		RELEASED TO PRODUCTION	01069-21			

FIBER OPTIC DUPLEX SC CONNECTOR
CUSTOMER DRAWING

PANDUIT™ CORP.
TINLEY PARK, ILL 60477

THIRD ANGLE PROJECTION

ALL DIMENSIONS ARE GIVEN IN INCHES UNLESS OTHERWISE SPECIFIED.
DIMENSIONAL TOLERANCES ARE:
(.X) (.XXX)±.010 [0.3]
(.XX)±.03 [0.8] ANGLES

DRAWN BY: MC
DATE: 06-14-06
CHK'D: GLK
REVIEW DRAWING NUMBERS: SEE NOTES
DRAWING FILENAME: M01069AF_DC_00B.prt
SCALE: NONE
PART NO.: FSCDM
DRAWING NO.: 01069-21
SIZE: A