THIS COPY IS PROVIDED ON A RESTRICTED BASIS AND IS NOT TO BE USED IN ANY WAY DETRIMENTAL TO THE INTERESTS OF PANDUIT CORP.

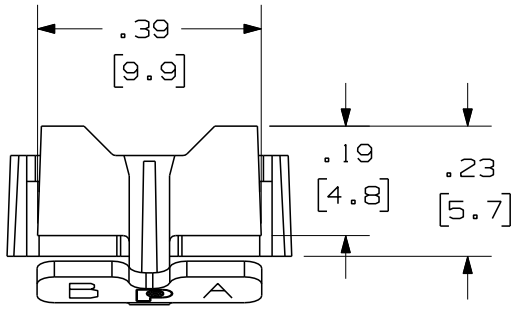

PANDUIT PART NUMBER	WEIGHT
FLCCLIPBL-L	.022 lb/50 Pcs [9.81 g/50 Pcs.]

NOTES:
1. SEE CURRENT CATALOG FOR ADDITIONAL PART NUMBER SUFFIXES TO INDICATE COLOR AND OR PACKAGE QUANTITY.
2. SEE CATALOG FOR COMPLETE LIST OF PARTS APPLICABLE FOR USE WITH THIS PART.
3. MATERIAL: PLASTIC
4. DIMENSIONS IN BRACKETS ARE METRIC [mm].

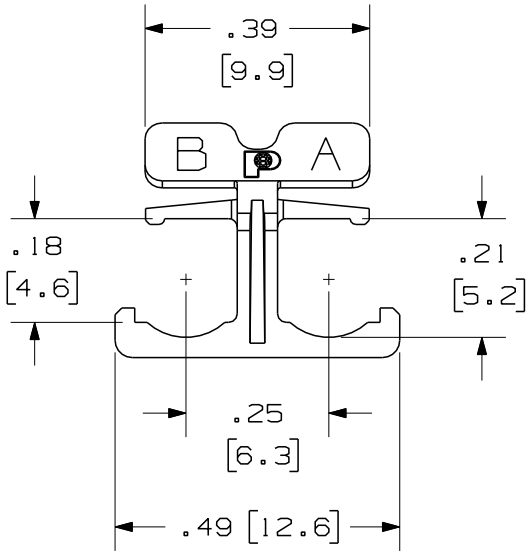

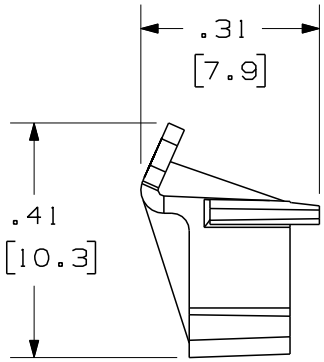

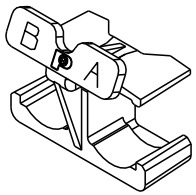

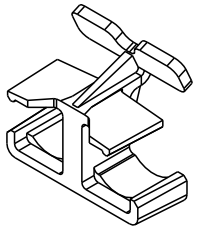

REV	DATE	BY	CHK	DESCRIPTION	ECN - R	CUST	SUP	OTH
R	06-28-06	MC		RELEASED TO PRODUCTION	01801-35			

OPTICAM LC DUPLEX CLIP
CUSTOMER DRAWING

PANDUIT™ CORP.
TINLEY PARK, ILL 60477

THIRD ANGLE PROJECTION

ALL DIMENSIONS ARE GIVEN IN INCHES UNLESS OTHERWISE SPECIFIED.
DIMENSIONAL TOLERANCES ARE:
(.X) (.XXX)±.010 [0.3]
(.XX)±.03 [0.8] ANGLES

REVIEW DRAWING NUMBERS

DRAWN BY MC
DATE 06-27-06
CHK'D

DRAWING FILENAME M01801DP_DC_00A.prt
SCALE
PART NO. FLCCLIPBL-L
DRAWING NO. 01801-35
SIZE A