THIS COPY IS PROVIDED ON A RESTRICTED BASIS AND IS NOT TO BE USED IN ANY WAY DETRIMENTAL TO THE INTERESTS OF PANDUIT CORP.

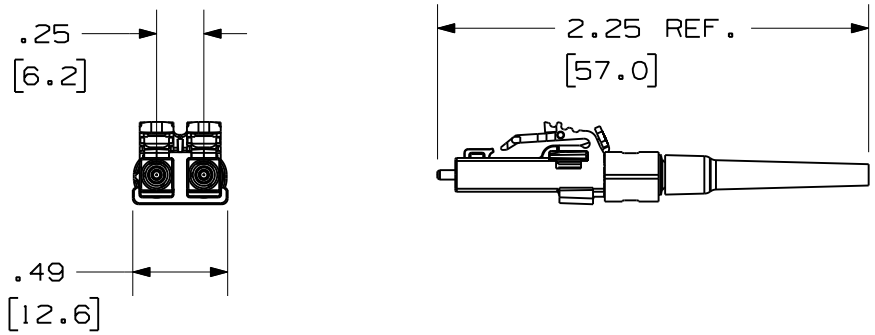

PANDUIT PART NUMBER	FIBER TYPE
FLCDMC5BLY	50/125um MULTIMODE
FLCDMC6BLY	62.5/125um MULTIMODE
FLCDMC6EIY	62.5/125um MULTIMODE
FLCDMCXAQY	50/125um OM3 MULTIMODE
FLCDSCBUY	9/125um SINGLEMODE

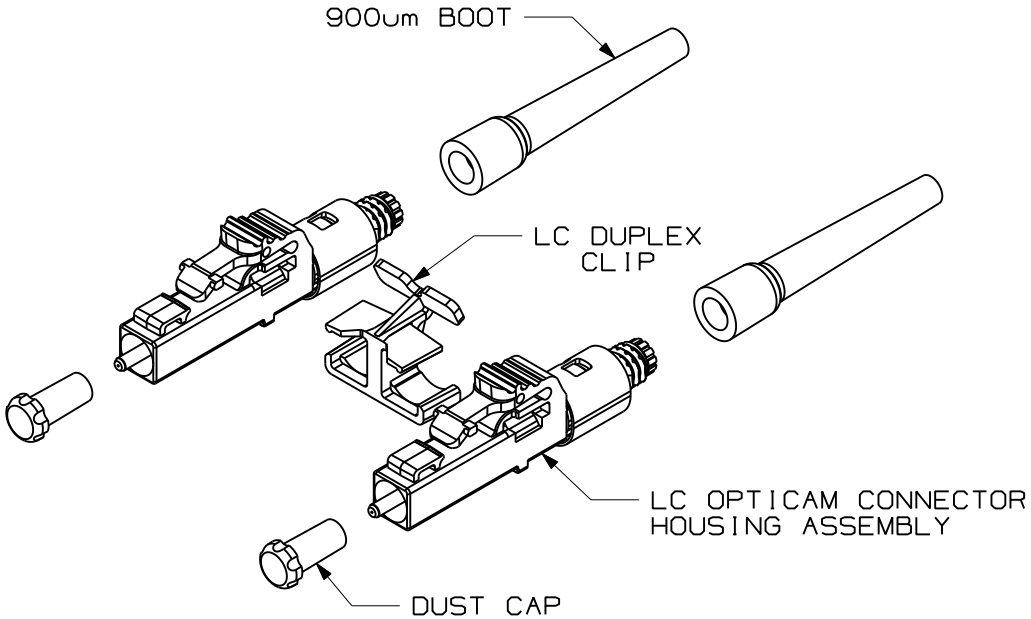

NOTES:
1. SEE CATALOG FOR ADDITIONAL PART NUMBER SUFFIXES TO INDICATE COLOR AND/OR PACKAGE QUANTITY.
2. ACCEPTS 50/125um, 62.5/125um, 50/125 OM3 MULTIMODE OR 9/125um SINGLEMODE 900um BUFFERED GLASS OPTICAL FIBER.
3. FULLY COMPLIES WITH THE FIBER OPTIC CONNECTOR PERFORMANCE REQUIREMENTS AS SPECIFIED BY TIA/EIA-568-B.3.
4. MATERIAL:
   BODY/HARDWARE: PLASTIC
   BOOT: THERMOPLASTIC RUBBER
   FERRULE: ZIRCONIA CERAMIC
5. DIMENSIONS IN BRACKETS ARE METRIC [mm].
6. ALL MATERIALS AND COMPONENTS USED MUST MEET THE MATERIAL RESTRICTIONS OF RoHS, (EUROPEAN DIRECTIVE 2002/95/EC ON THE RESTRICTION OF HAZARDOUS SUBSTANCES) AS PROPOSED BY THE RoHS TECHNICAL ADAPTATION COMMITTEE.

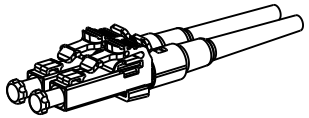

REV	DATE	BY	CHK	DESCRIPTION	ECN - R		CUST	SUP	OTH
2	09-01-11	MC	MTV	RELEASED TO PRODUCTION	01801-33	MTV	RWB		

OPTICAM DUPLEX LC CONNECTOR WITH 900um BOOTS
CUSTOMER DRAWING

PANDUIT™ CORP.
TINLEY PARK, ILL 60477

THIRD ANGLE PROJECTION

ALL DIMENSIONS ARE GIVEN IN INCHES UNLESS OTHERWISE SPECIFIED.
DIMENSIONAL TOLERANCES ARE:
(.X) (.XXX)±.010 [0.3]
(.XX)±.03 [0.8] ANGLES

DRAWN BY: MC
DATE: 02-15-06
CHK'D: RTFI
REVIEW DRAWING NUMBERS

DRAWING FILENAME: M01801YD_DC_DUP/03B
SCALE: NONE
PART NO.: SEE TABLE
DRAWING NO.: 01801-33
SIZE: A