THIS COPY IS PROVIDED ON A RESTRICTED BASIS AND IS NOT TO BE USED IN ANY WAY DETRIMENTAL TO THE INTERESTS OF PANDUIT CORP.

PANDUIT P/N	WEIGHT
UICFPRTR4**	1.55 LB/10 PCS (704.0 g/10 PCS)

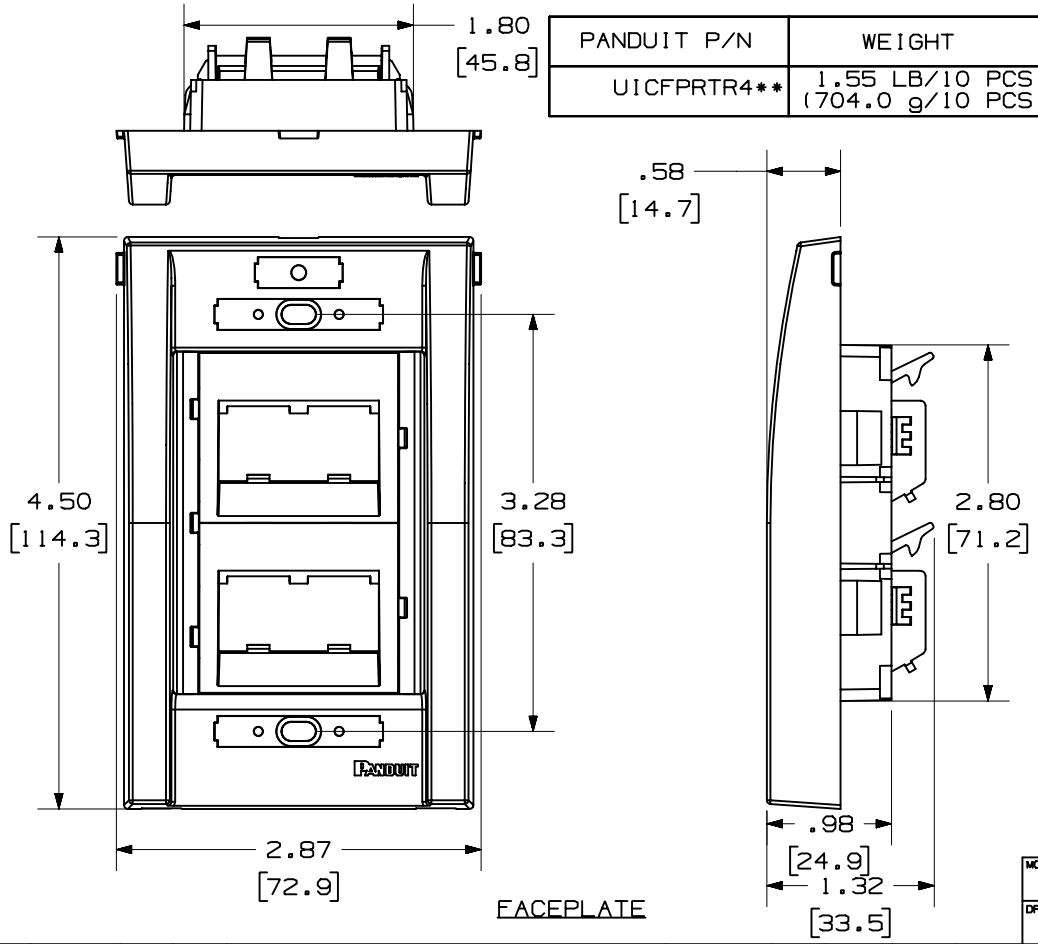

FACEPLATE

NOTES:

1. SEE CURRENT CATALOG FOR ADDITIONAL PART NUMBER SUFFIXES TO INDICATE COLOR AND OR PACKAGE QUANTITY.
2. SEE CATALOG FOR COMPLETE LIST OF PARTS APPLICABLE FOR USE WITH THIS PART.
3. DIMENSIONS IN PARENTHESES ARE IN METRIC.
4. PART INCLUDES:
   - 1- FACEPLATE
   - 1- TAMPER RESISTANT COVER
   - 1- CLEAR SCREW COVER
   - 1- COLOR COORDINATED SCREW COVER
   - 2- CLEAR LABEL COVER
   - 2- MOUNTING SCREW
   - 2- 30° SLOPED RECESSED 1/2 INSERT (CHSRE2**)
   - 1- TAMPER RESISTANT SCREW FOR COVER
   - 1- PHILLIPS HEAD SCREW FOR COVER
5. MOUNTING RECOMMENDATIONS:
   - MOUNT TO MWBA1 (OR EQUIVALENT) SINGLE GANG WALL BOARD ADAPTER
   - IF IN-WALL BOX IS USED, DEPTH MUST BE MIN. OF 2.125[53.98] (FOR COPPER APPLICATIONS)

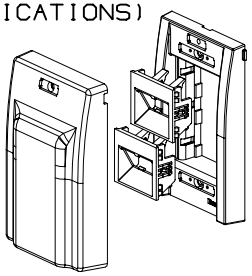

REV	DATE	BY	CHK	DESCRIPTION	ECN - R	CUST	SUP	OTH
R	7-24-02	JsP		RELEASED TO PRODUCTION	01340-06			

MODEL FILENAME: M01340AF_UICFPRTR4_ASM_04.PRT

DRAWING FILENAME: M01340AF_DC_04A.PRT

SIZE: A

MINI-COM™ ULTIMATE ID™ 4 POSITION RECESSED FACEPLATE WITH TAMPER RESISTANT COVER CUSTOMER DRAWING

PANDUIT™ CORP.
TINLEY PARK, ILL 60477

THIRD ANGLE PROJECTION

ALL DIMENSIONS ARE GIVEN IN INCHES, UNLESS OTHERWISE SPECIFIED.

DIMENSIONAL TOLERANCES ARE:
(.X) ± (.XXX) ±.010(.3)
(.XX) ±.03(.8) ANGLES ±

DRAWN BY: JsP

DATE: 7-24-02

CHK'D:

REVIEW DRAWING NUMBERS

MATERIAL: ABS

I.I. NUMBER: N/A

PRODUCT SPEC: N/A

WORK INSTRUCTION: N/A

SCALE: NONE

PART NO.: UICFPRTR4**

DRAWING NO.: 01340-07

THIS COPY IS PROVIDED ON A RESTRICTED BASIS AND IS NOT TO BE USED IN ANY WAY DETRIMENTAL TO THE INTERESTS OF PANDUIT CORP.

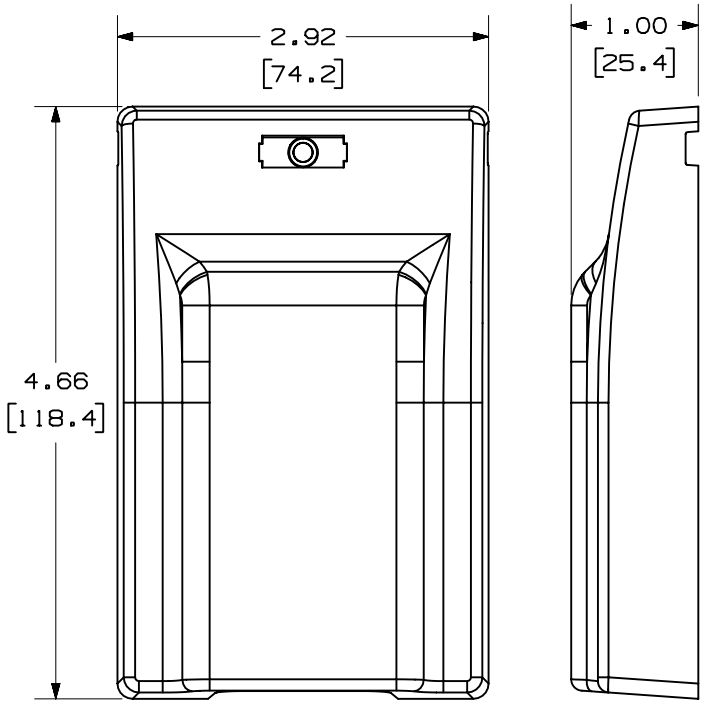

COVER

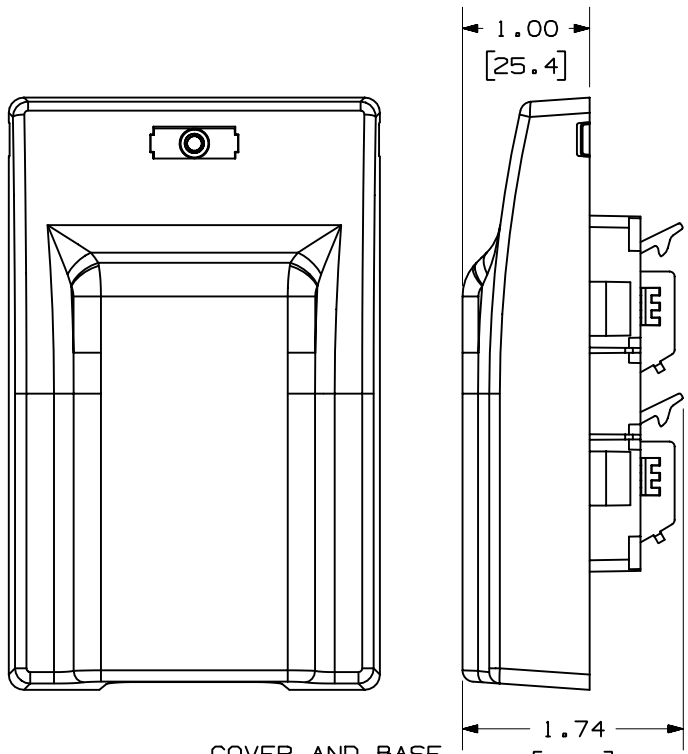

COVER AND BASE ASSEMBLED

MODEL FILENAME	M01340AF_UICFPRTR4_ASM_04.PRT
DRAWING FILENAME	M01340AF_DC_04A.PRT
SIZE	A

MINI-COM™ ULTIMATE ID™ 4 POSITION RECESSED FACEPLATE WITH TAMPER RESISTANT COVER CUSTOMER DRAWING

PANDUIT™ CORP.
TINLEY PARK, ILL 60477

THIRD ANGLE PROJECTION

ALL DIMENSIONS ARE GIVEN IN INCHES, UNLESS OTHERWISE SPECIFIED.

DIMENSIONAL TOLERANCES ARE:
(.X) ± (.XXX) ±.010(.3)
(.XX) ±.03(.8) ANGLES ±

I.I. NUMBER	N/A
PRODUCT SPEC	N/A
WORK INSTRUCTION	N/A
SCALE	NONE
DRAWN BY	JsP
DATE	7-24-02
CHK'D	
REVIEW DRAWING NUMBERS	
MATERIAL: ABS	
PART NO.	UICFPRTR4**
DRAWING NO.	01340-07
	PAGE 2 OF 2

REV	DATE	BY	CHK	DESCRIPTION	ECN - R	CUST	SUP	OTH
R	7-24-02	JsP		RELEASED TO PRODUCTION	01340-06			