THIS COPY IS PROVIDED ON A RESTRICTED BASIS AND IS NOT TO BE USED IN ANY WAY DETRIMENTAL TO THE INTERESTS OF PANDUIT CORP.

PANDUIT PART NO.	WEIGHT
CFP1**	.47 LB/10 PCS (212 G/10 PCS)

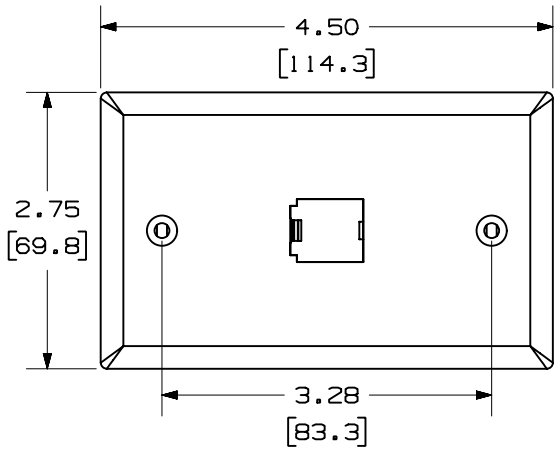

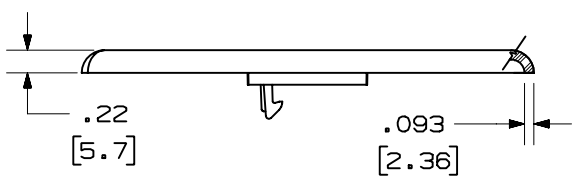

NOTES:

** 1. SEE CURRENT CATALOG FOR ADDITIONAL PART NUMBER SUFFIXES TO INDICATE COLOR AND OR PACKAGE QUANTITY.

2. TWO #6-32 X 1" LONG, SLOTTED PAN HEAD SCREWS WITH NON-THREADED LEAD POINT PROVIDED FOR FASTENING FACEPLATES.

3. DIMENSIONS IN PARENTHESES ARE IN METRIC.

4. PRODUCT ACCEPTS ANY SINGLE POSITION MINI-COM MODULE.

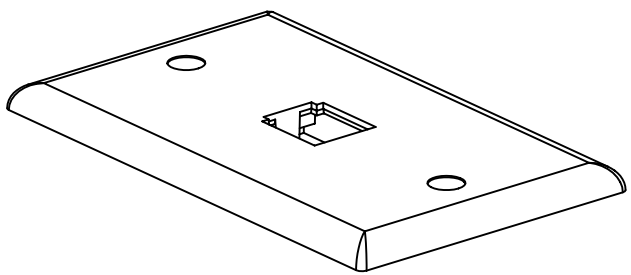

REV	DATE	BY	CHK	DESCRIPTION	ECN - R	CUST	SUP
2	4-6-00	JsP		B. REVISED TITLE, WAS: "DESIGNER SERIES".	35544-44		
1	9-12-97	RCA	CEF	A. REV'D TITLE WAS MINI-COM 1 POSITION STANDARD VERTICAL FACEPLATE.	35544-44	CEF	
R	6-17-97	JBA	CEF	RELEASED TO PRODUCTION.	35544-44	CEF	

CAD FILENAME/LAYERS: D35544CU_DC_CFP1_00C.PRT

PANDUIT CORP. TINLEY PARK, ILLINOIS

A CLASSIC SERIES 1 POSITION VERTICAL FACEPLATE (CFP1**) B

CUSTOMER DRAWING

UNLESS OTHERWISE SPECIFIED, DIMENSIONAL TOLERANCES ARE:
(.X) ± (.XXX) ±.010(.3)
(.XX) ±.03(.8) ANGLES ±

UNLESS OTHERWISE SPECIFIED, ALL DIMENSIONS ARE GIVEN IN INCHES, THIRD ANGLE PROJECTION.

DRAWN BY: JBA
MAT'L: ABS
SCALE: NONE
DATE: 6-17-97
DRAWING NO.: 35544-44
DWG SIZE: A
CHK'D: CEF