THIS COPY IS PROVIDED ON A RESTRICTED BASIS AND IS NOT TO BE USED IN ANY WAY DETRIMENTAL TO THE INTERESTS OF PANDUIT CORP.

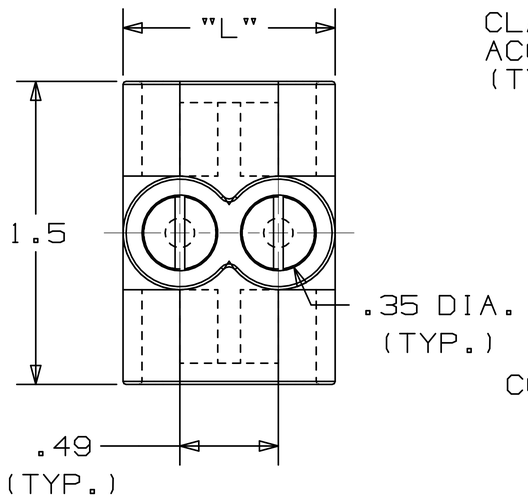

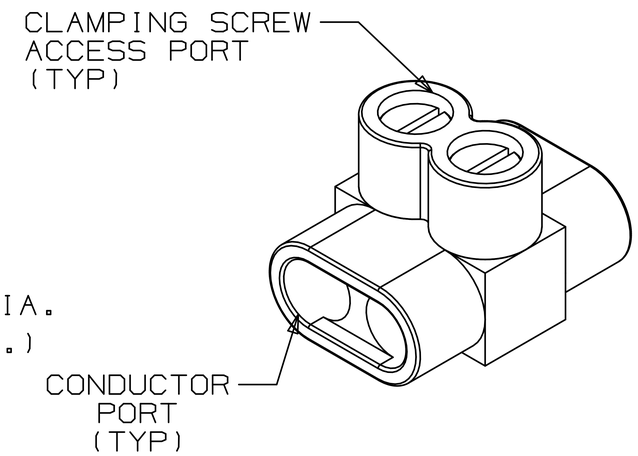

TWO PORT CONNECTOR BLOCK SHOWN WITH PLASTIC CLOSURE PLUGS REMOVED. SEE TABLE FOR DIMENSIONS OF PARTS WITH ADDITIONAL PORTS.

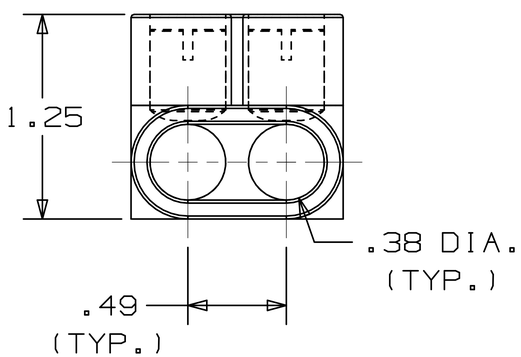

PART NUMBER	# CONDUCTOR PORTS	DIM "L"
PCSB4-2-12Y	2	1.16
PCSB4-3-12Y	3	1.64
PCSB4-4-6Y	4	2.13
PCSB4-5-6Y	5	2.62
PCSB4-6-6Y	6	3.10
PCSB4-7-4Y	7	3.59
PCSB4-8-4Y	8	4.08

NOTES:

1. UL 486B LISTED. DUAL RATED CU9AL FOR ALUMINUM OR COPPER CONDUCTORS. MEETS OR EXCEEDS ANSI C119.4
2. WIRE RANGE: #4-#14 AWG STR,#10-#14 AWG SOL. ONLY ONE CONDUCTOR PER PORT ALLOWED
3. STRIP LENGTH: .50 +.06/-0
4. TIGHTENING TORQUE
   #6-#4 AWG: 45 IN-LB
   #8 AWG: 40 IN-LB
   #14-#10 AWG: 35 IN-LB
5. VOLTAGE RATING: 600 V. MAX. BUILDING WIRE, 1000 V. MAX. IN SIGNS & FIXTURES.
6. TEMPERATURE RATING: 90° C.
7. CONNECTOR BLOCK BODY IS MADE FROM ALUMINUM.CLAMPING SCREWS (SLOTTED) ARE MADE FROM PLATED STEEL.PORTS IN CONNECTOR BLOCK ARE PREFILLED WITH AN OXIDE-INHIBITING COMPOUND.
8. INSULATION MATERIAL IS CLEAR PVC.
9. CLAMPING SCREW ACCESS PORTS AND ALL WIRE ENTRY PORTS ARE PROVIDED WITH REMOVABLE PLASTIC CLOSURE PLUGS.
10. ALL DIMENSIONS SHOWN ARE NOMINAL.
11. PACKAGE QTY: -12Y = 12 PCS.
    -6Y = 6 PCS.
    -4Y = 4 PCS.
12. THIS PART IS ROHS COMPLIANT.

UL
LISTED
509D

C41573_01

REV	DATE	BY	CHK	DESCRIPTION	ECN #	CUST	PM
01	3/06	JHNU	LEM	REVISED ROHS NOTE	PC00334		
00	2/06	JHNU	LEM	DRAWING RELEASED - ROHS COMPLIANT	PC00299		

PANDUIT CORP. TINLEY PARK, ILLINOIS

MULTI-TAP INSULATED CONNECTORS
PCSB 4 SERIES

DRAWN BY	CHK'D	SCALE	DRAWING NO.
JHNU		N/A	C41573