THIS COPY IS PROVIDED ON A RESTRICTED BASIS AND IS NOT TO BE USED IN ANY WAY DETRIMENTAL TO THE INTERESTS OF PANDUIT CORP.

C

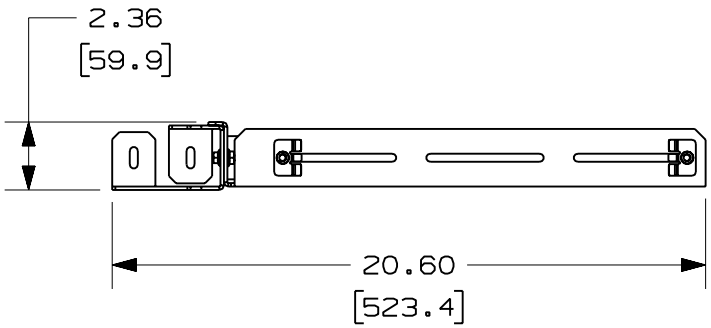

PANDUIT PART NUMBER	WEIGHT
FR12ACAB	4.32 LB/EACH (1960g/EACH)

F

G NOTES:

1. SEE CURRENT CATALOG FOR ADDITIONAL PART SUFFIXES TO INDICATE PACKAGE QUANTITY.
2. THE FIBERRUNNER 12x4 QUIKLOCK ADJUSTABLE CABINET BRACKET IS USED TO SUPPORT THE FIBERRUNNER 12x4 CABLE ROUTING SYSTEM DIRECTLY ALONG THE TOP OF TELECOMMUNICATION CABINETS WITHOUT THE USE OF THREADED ROD.
3. THE FIBERRUNNER 12x4 QUIKLOCK ADJUSTABLE CABINET BRACKET INCLUDES:
   ONE (1) BRACKET ASSEMBLY,
   TWO (2) 1/4-20x5/8 HEX HEAD SERRATED FLANGE SCREWS,
   TWO (2) 1/4-20 HEX SERRATED FLANGE NUTS.
   ONE (1) 1/4-20 T-BOLT,
   ONE (1) 1/4-20 HEX KEPS LOCK NUT
4. FINISH COLOR: BLACK (EXCEPT HARDWARE)
5. DIMENSIONS IN PARENTHESES ARE IN METRIC.

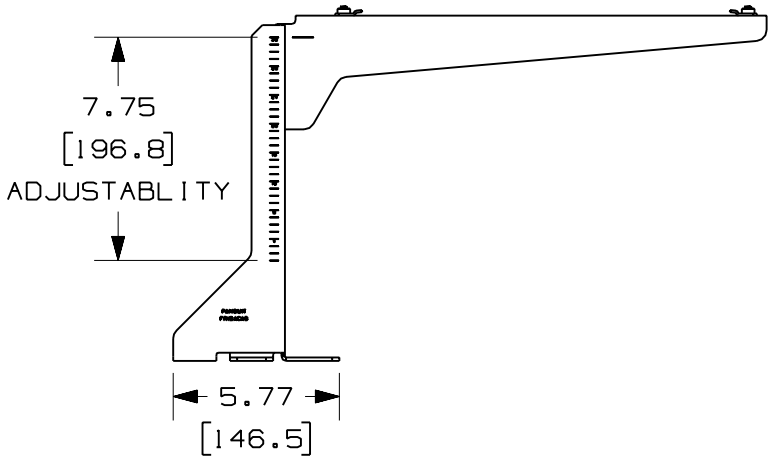

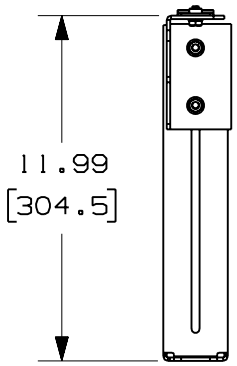

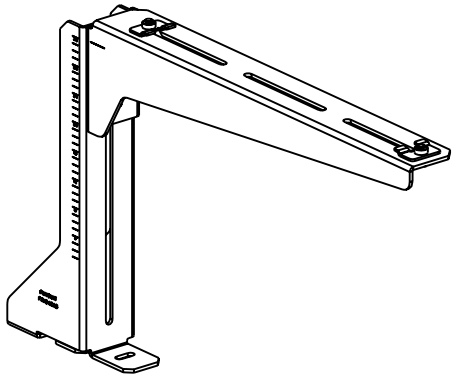

ENG. REF.: D38557BF_DC_FR12ACAB_02.prt

CAD FILENAME/LAYERS D FR12ACAB.pdf

PANDUIT CORP TINLEY PARK, ILLINOIS

FIBERRUNNER 12x4 QUIKLOCK ADJUSTABLE CABINET BRACKET (FR12ACAB)
CUSTOMER DRAWING E

UNLESS OTHERWISE SPECIFIED, DIMENSIONAL TOLERANCES ARE:
(.X) ± (.XXX) ±
(.XX) ±.03 (.8) ANGLES ±

UNLESS OTHERWISE SPECIFIED, ALL DIMENSIONS ARE GIVEN IN INCHES, THIRD ANGLE PROJECTION.

DRAWN BY JHNU
MAT'L: STEEL
SCALE NONE
DATE 5-13-03
DRAWING NO. 38557-06
DWG A SIZE
CHK'D SMF

REV	DATE	BY	CHK	DESCRIPTION	ECN	R	CUST	SUP	GMBH
-	--------	---	--	G. REVISED GENERAL NOTES.	--------	--	--		
-	--------	---	--	F. REVISED PART WEIGHT. E. REVISED DRAWING TITLE.	--------	--	--		
1	1-5-07	MSO	RN	D. REVISED CAD FILENAME. C. REVISED AND REDRAWN.	38557-06	RN	RN		