THIS COPY IS PROVIDED ON A RESTRICTED BASIS AND IS NOT TO BE USED IN ANY WAY DETRIMENTAL TO THE INTERESTS OF PANDUIT CORP.

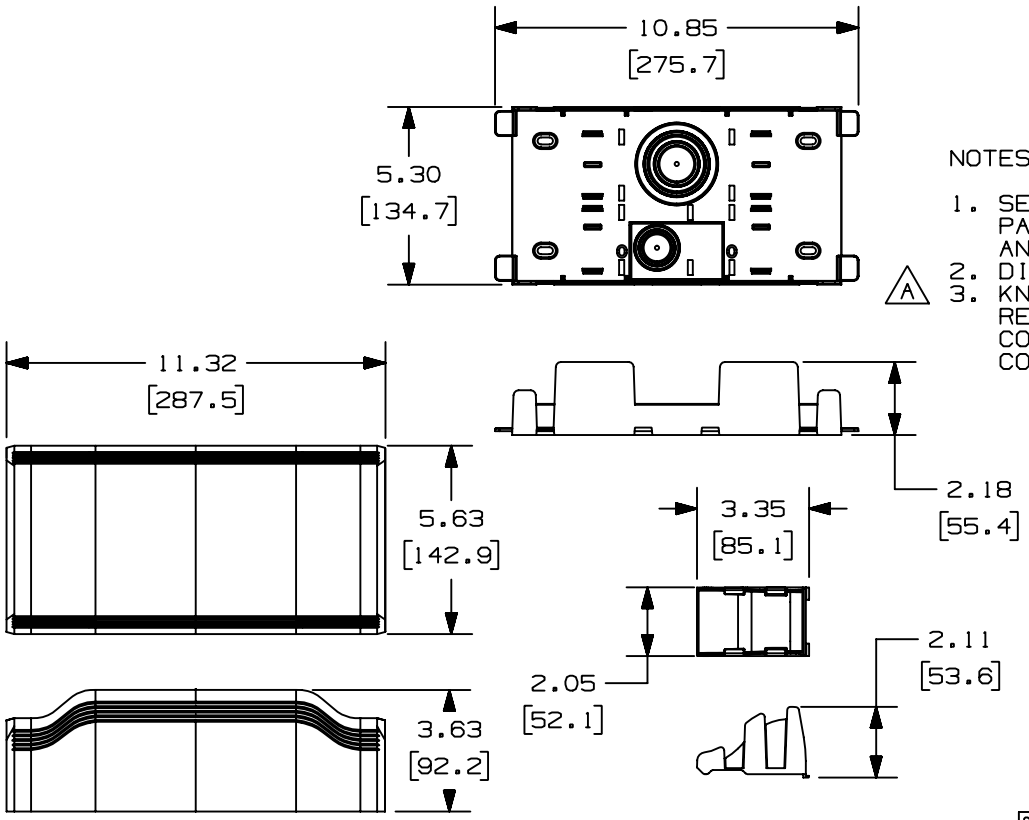

PANDUIT P/N	WEIGHT
TGBF	1.14 LB/EACH [516g /EACH]

NOTES:

1. SEE CURRENT CATALOG FOR ADDITIONAL PART SUFFIXES TO INDICATE COLOR AND/OR PACKAGE QUANTITY.
2. DIMENSIONS IN PARENTHESIS ARE IN METRIC.
3. KNOCKOUT SIZES ARE AS FOLLOWS:
   RECTANGULAR: 1.755 [44.58] x 2.818 [71.58]
   CONDUIT SIZE: 1/2", 3/4", 1"
   CONDUIT SIZE: 3/4", 1", 1 1/4", 1 1/2", 2"

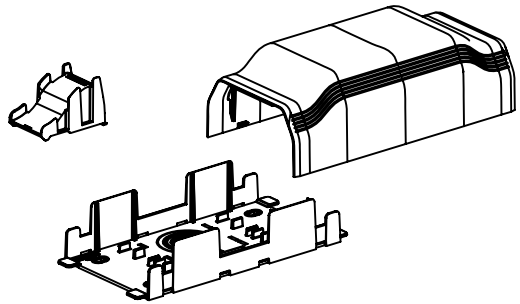

REV	DATE	BY	CHK	DESCRIPTION	ECN	-	R	CUST	SUP
1	03-30-05	JBN	PM	A. ADDED NOTE #3	37788-07	RGRO	RGRO		
R	04-17-01	REWE	PM	RELEASED TO PRODUCTION	37788-07	RGRO	RGRO		

CAD FILENAME/LAYERS: D37788BN_DC_TGBF_00B.PRT

PANDUIT CORP. TINLEY PARK, ILLINOIS

TG BACKFEED FITTING
(TGBF)
CUSTOMER DRAWING

UNLESS OTHERWISE SPECIFIED, DIMENSIONAL TOLERANCES ARE:
(.X) ± (.XXX) ±
(.XX) ±.03(.8) ANGLES ±

UNLESS OTHERWISE SPECIFIED, ALL DIMENSIONS ARE GIVEN IN INCHES, THIRD ANGLE PROJECTION.

DRAWN BY: REWE
DATE: 04-17-01
CHK'D: PM
MAT'L: PVC
SCALE: NONE
DRAWING NO.: 37788-07
DWG SIZE: A