THIS COPY IS PROVIDED ON A RESTRICTED BASIS AND IS NOT TO BE USED IN ANY WAY DETRIMENTAL TO THE INTERESTS OF PANDUIT CORP.

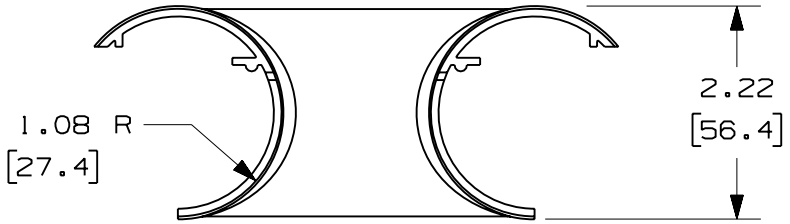

PANDUIT PART NUMBER	WEIGHT
TRC4HDBL	.12 LB/EACH (54g/EACH)

NOTES:

1. SEE CURRENT CATALOG FOR ADDITIONAL PART SUFFIXES TO INDICATE PACKAGE QUANTITY.
2. THE PANDUCT TYPES H AND HS 4x4 WIRING DUCT BEND RADIUS CONTROL TRUMPET ALLOWS FOR CABLES TO SPILL OUT OF THE PANDUCT TYPES H AND HS 4x4 WIRING DUCT WHILE MAINTAINING A 1" (25.4) BEND RADIUS.
3. DIMENSIONS IN PARENTHESES ARE IN METRIC.

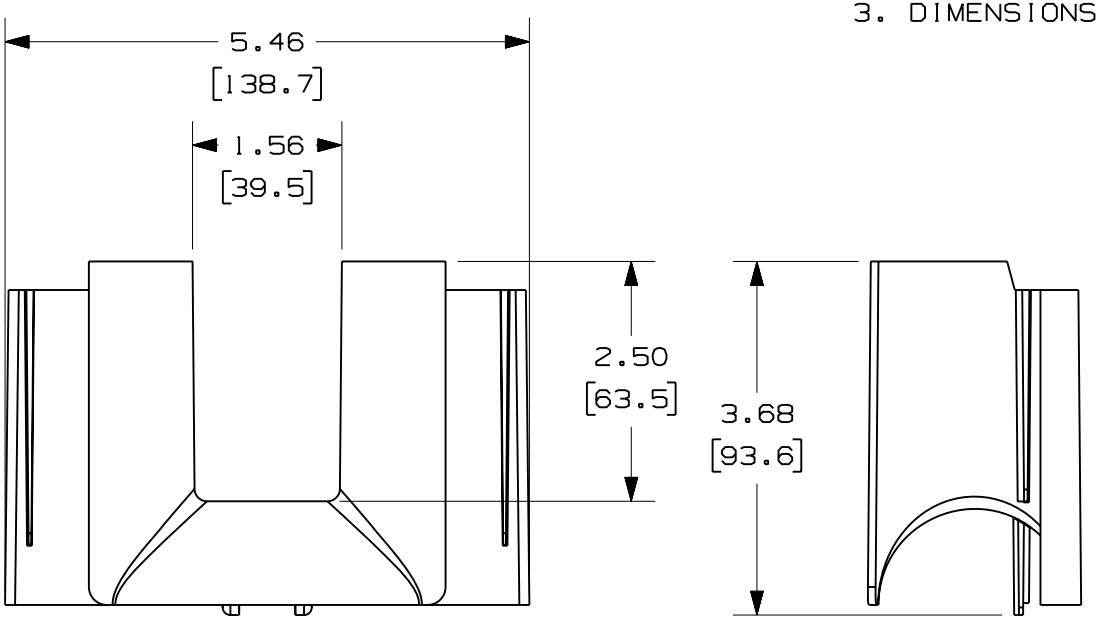

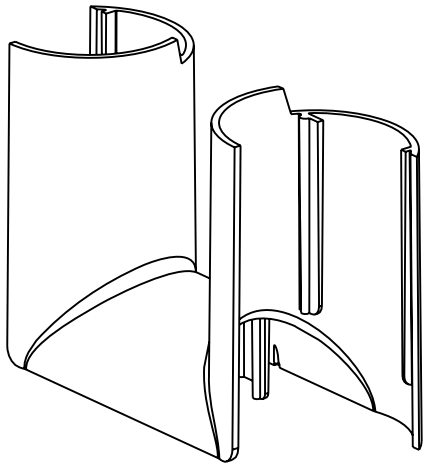

ENG. REF.: D39286BB_DC_TRC4HDBL_01.prt

CAD FILENAME/LAYERS: TRC4HDBL.pdf

PANDUIT CORP TINLEY PARK, ILLINOIS

PANDUCT TYPES H AND HS 4x4 WIRING DUCT BEND RADIUS CONTROL TRUMPET (TRC4HDBL)

CUSTOMER DRAWING

UNLESS OTHERWISE SPECIFIED, DIMENSIONAL TOLERANCES ARE:
(.X) ± (.XXX) ±
(.XX) ±.03 (.8) ANGLES ±

UNLESS OTHERWISE SPECIFIED, ALL DIMENSIONS ARE GIVEN IN INCHES, THIRD ANGLE PROJECTION.

DRAWN BY: MSO
DATE: 10-7-05
CHK'D: SMF
MAT'L: ABS
SCALE: NONE
DRAWING NO.: 39286-02
DWG: A
SIZE

REV	DATE	BY	CHK	DESCRIPTION	ECN - R	CUST	SUP	GMBH
1	7-21-06	DTP	RN	A. REVISED PART WEIGHT	39286-02	RN	RN	
R	10-7-05	MSO	SMF	RELEASED TO PRODUCTION	39286-02	RN	RN	