THIS COPY IS PROVIDED ON A RESTRICTED BASIS AND IS NOT TO BE USED IN ANY WAY DETRIMENTAL TO THE INTERESTS OF PANDUIT CORP.

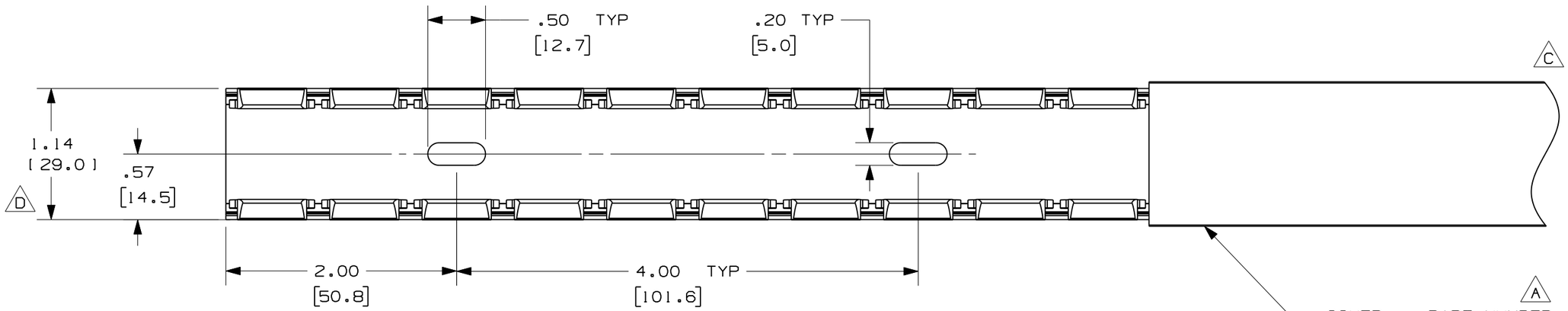

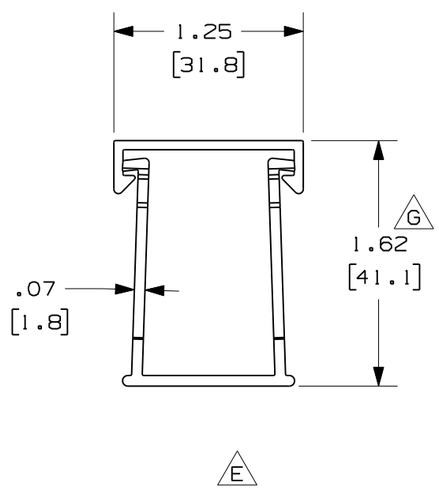

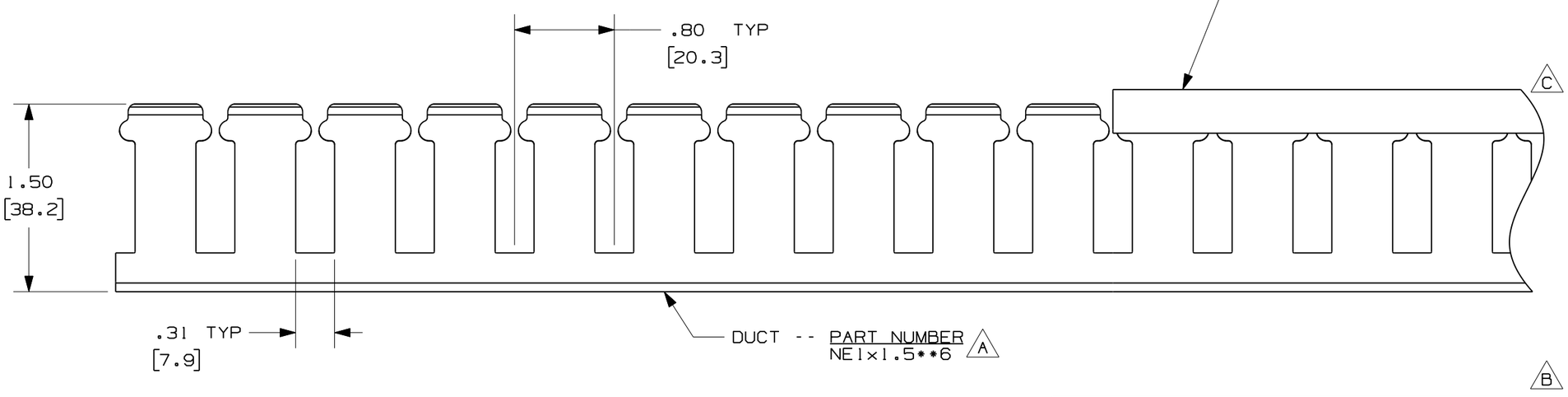

A NOTE.

F 1. ALL DIMENSIONS ARE REFERENCE ONLY.

2. DIMENSIONS IN PARENTHESES ARE METRIC.

I 3. DUCT AND COVER ARE AVAILABLE IN 6 FT [1828.8] LENGTHS.

4. THE ** DENOTE COLOR.

REV	DATE	BY	CHK	DESCRIPTION
3	9-25-08	JCST	MKBE	I. CHANGED / ADDED NOTES H. CHANGED MATERIAL
----	------	--	---	G. CORRECTED DIMENSION F. ADDED LENGTH NOTE
2	8-7-07	JCST	MKBE	E. DELETED DIMENSION D. ADDED DIMENSION
1	7-29-05	JCST	MKBE	B. CHANGED TITLE BLOCK C. CHANGED VIEWS A. ADDED LABELS, AND NOTES
R	10-16-03	JHNU	JGG	DRAWING RELEASED

CAD FILENAME/LAYERS: D11000RK_DC/02A

PANDUIT CORP. TINLEY PARK, ILLINOIS

WIRING DUCT - TYPE NE WITH COVER
1 X 1.5
MARKETING DRAWING

DRAWN BY: JHNU
DATE: 10-16-03
CHECKED BY: JGG

MAT'L: HALOGEN FREE MODIFIED PPO H

SCALE: FULL

DRAWING NO. 36897-941

DWG SIZE: B