THIS COPY IS PROVIDED ON A RESTRICTED BASIS AND IS NOT TO BE USED IN ANY WAY DETRIMENTAL TO THE INTERESTS OF PANDUIT CORP.

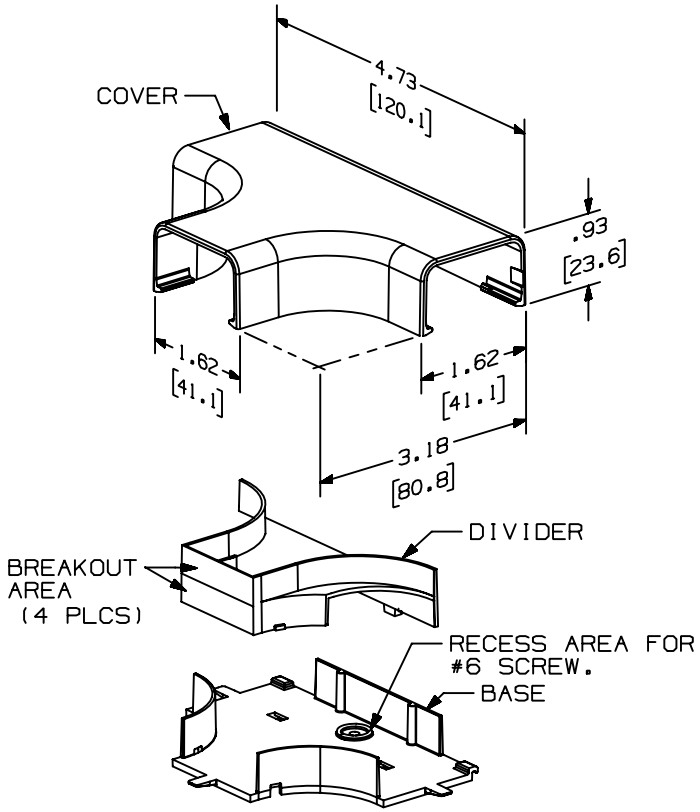

PANDUIT PART NO.	WEIGHT
TFXD10	12.7 LB/100 PCS (5760 g/100 PCS)

NOTES:
1. SEE CURRENT CATALOG FOR ADDITIONAL PART NUMBER SUFFIXES TO INDICATE COLOR AND OR PACKAGE QUANTITY.
2. (A) THIS PRODUCT IS INTENDED TO BE USED WITH PANDUIT TYPE LD2P10 RACEWAY.
3. THE DIVIDER IS INTENDED FOR OPTION TO SEPARATE AND/OR CROSS OVER POWER AND COMMUNICATIONS FOR PLACEMENT PURPOSES IN RACEWAY.
4. NOMINAL WALL THICKNESSES:
   BASE = .090 [2.3]
   DIVIDER = .055 [1.4]
   COVER = .070 [1.8]
5. THIS PRODUCT IS FEATURED WITH THE TIA/EIA COMPLIANT BEND RADIUS.
6. DIMENSIONS IN PARENTHESIS ARE IN METRIC.

REV	DATE	BY	CHK	DESCRIPTION	ECN	CHK	CUST	SUP
1	05-10-04	JHEP	RGRO	A. FIXED CLERICAL ERROR	35013-08	RGRO	RGRO	
R	02-14-95	DW	CEF	RELEASED TO PRODUCTION	35013-08	CEF	CEF	

CAD FILENAME/LAYERS: D35013BH_LD_TFXD10_01.PRT

PANDUIT CORP. TINLEY PARK, ILLINOIS

TEE FITTING BASE, DIVIDER, AND COVER (TFXD10)
CUSTOMER DRAWING

UNLESS OTHERWISE SPECIFIED, DIMENSIONAL TOLERANCES ARE:
(.X) ± (.XXX) ±.015 [.4]
(.XX) ±.03 [.8] ANGLES ±

UNLESS OTHERWISE SPECIFIED, ALL DIMENSIONS ARE GIVEN IN INCHES, THIRD ANGLE PROJECTION.

DRAWN BY: DW
DATE: 02-14-95
CHECKED BY: CEF
MAT'L: PVC
SCALE: NONE
DRAWING NO.: 35013-08
DWG SIZE: A