THIS COPY IS PROVIDED ON A RESTRICTED BASIS AND IS NOT TO BE USED IN ANY WAY DETRIMENTAL TO THE INTERESTS OF PANDUIT CORP.

PANDUIT P/N	WEIGHT
T70SDB	.32 LB/10 PCS (147 g/10 PCS)

A

NOTES:
1. SEE CURRENT CATALOG FOR ADDITIONAL PART SUFFIXES TO INDICATE COLOR AND OR PACKAGE QUANTITY.
2. THIS PART IS DESIGNED FOR USE WITH T70, TG, CORNER AND PAN-POLE RACEWAYS.
3. ACCEPTS PANDUIT SNAP-ON AND SCREW-ON STYLE FACEPLATES.
4. DIMENSIONS IN PARENTHESES ARE IN METRIC.

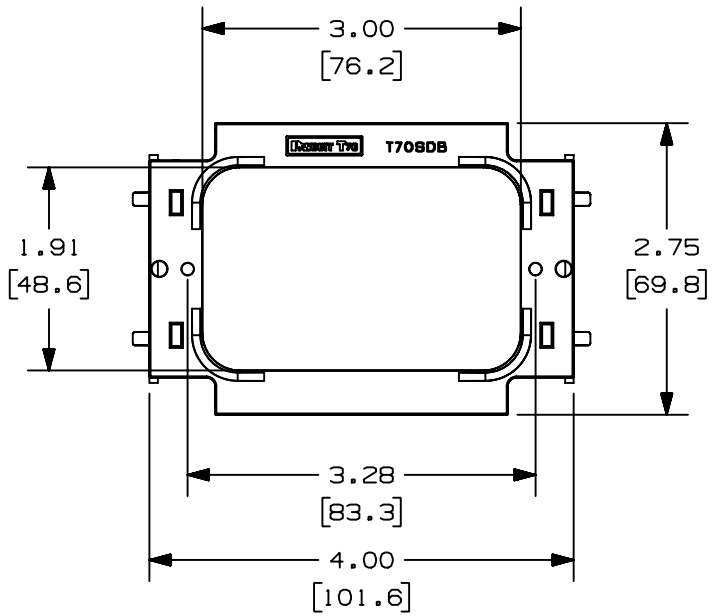

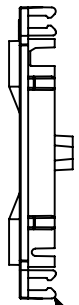

LATCHES FOR ATTACHING TO RACEWAY BASE

A

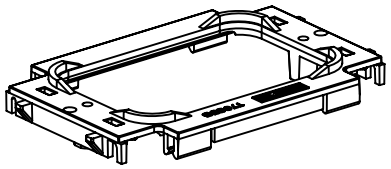

CAD FILENAME/LAYERS: D38697BA_DC_T70SDB_05A.prt

PANDUIT CORP. TINLEY PARK, ILLINOIS

SNAP-ON DEVICE BRACKET (T70SDB)
CUSTOMER DRAWING

UNLESS OTHERWISE SPECIFIED, DIMENSIONAL TOLERANCES ARE:
(.X) ± (.XXX) ±
(.XX) ±.03 [.8] ANGLES ±

UNLESS OTHERWISE SPECIFIED, ALL DIMENSIONS ARE GIVEN IN INCHES, THIRD ANGLE PROJECTION.

DRAWN BY: JHEP
MAT'L: PVC
SCALE: NONE
DATE: 11-12-03
DRAWING NO.: 38697-03
DWG SIZE: A
CHECKED BY: RMHI

REV	DATE	BY	CHK	DESCRIPTION	ECN	CHK	CUST	SUP
1	01-28-04	JBN	RMHI	A. REVISED GEOMETRY / PART WEIGHT	38697-03	RGRO	RGRO	
R	11-12-03	JHEP	RMHI	RELEASED TO PRODUCTION	38697-03	RGRO	RGRO	