THIS COPY IS PROVIDED ON A RESTRICTED BASIS AND IS NOT TO BE USED IN ANY WAY DETRIMENTAL TO THE INTERESTS OF PANDUIT CORP.

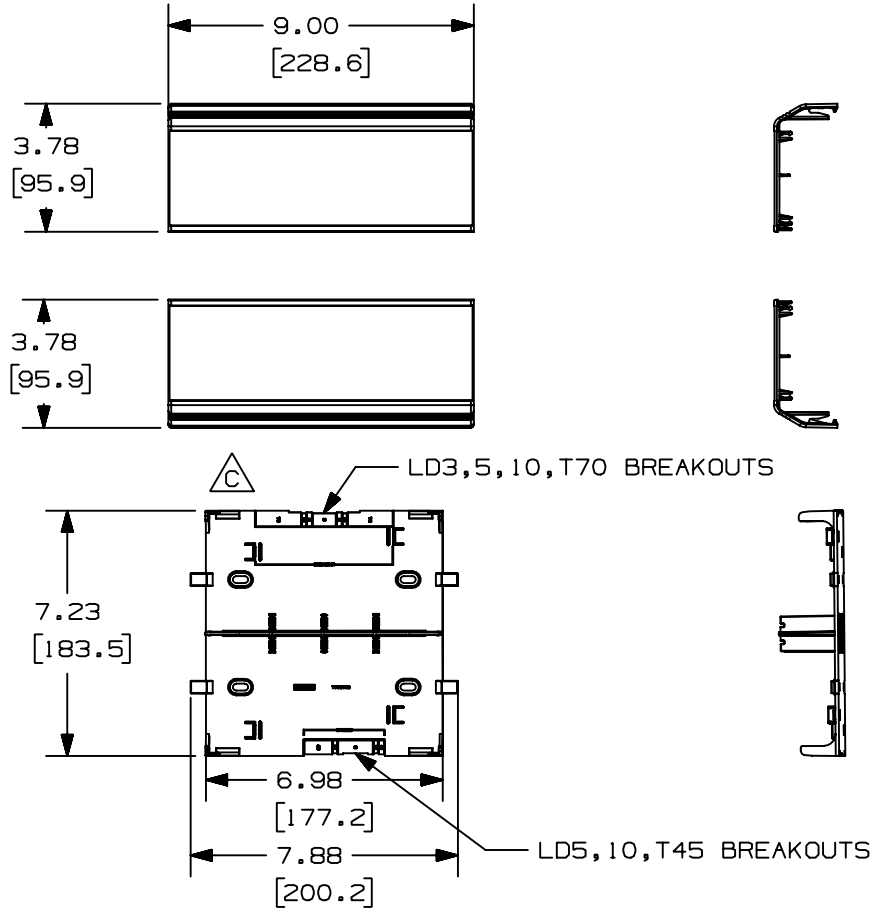

PANDUIT P/N	WEIGHT
T702TRL	8.14 LB/10 PCS (3684 g/10 PCS) A

NOTES:

1. SEE CURRENT CATALOG FOR ADDITIONAL PART SUFFIXES TO INDICATE COLOR AND OR PACKAGE QUANTITY.
2. BREAKOUTS TO ACCOMMODATE ALL LD PROFILE RACEWAYS.
3. FOR DIVIDED TRANSITIONS TO LD2P10 OR T45, USE T702TRI WITH THE T702TRL.
4. COVER IS EXTENDED OUT AND DOWN AROUND SIDES OF BASE WHEN ASSEMBLED.
5. DIMENSIONS IN PARENTHESES ARE IN METRIC.

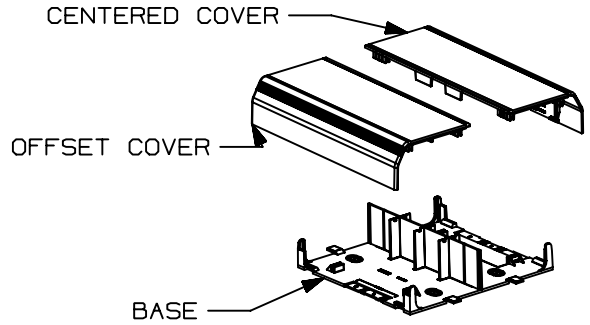

REV	DATE	BY	CHK	DESCRIPTION	ECN	CHK	CUST	SUP
2	01-13-00	JHNU	HIW	C. REVISED GEOMETRY FOR T45 BREAKOUT	34866-92	HIW	HIW	
1	07-29-99	DW	HIW	B. REVISED TITLE NAME. A. REVISED MATERIAL AND WEIGHT.	34866-92	HIW	HIW	
R	04-16-98	DW	HIW	RELEASED TO PRODUCTION.	34866-92	HIW	HIW	

CAD FILENAME/LAYERS: D34866ED_DC_T702TRL_02

PANDUIT CORP. TINLEY PARK, ILLINOIS

TWIN-70 TRANSITION TO LD RACEWAYS (T702TRL) B

CUSTOMER DRAWING

UNLESS OTHERWISE SPECIFIED, DIMENSIONAL TOLERANCES ARE:
(.X) ± (.XXX) ±
(.XX) ±.03(.8) ANGLES ±

UNLESS OTHERWISE SPECIFIED, ALL DIMENSIONS ARE GIVEN IN INCHES, THIRD ANGLE PROJECTION.

DRAWN BY: DW

MAT'L: A PVC

SCALE: NONE

DATE: 04-16-98

CHECKED BY: HIW

DRAWING NO.: 34866-92

DWG SIZE: A