THIS COPY IS PROVIDED ON A RESTRICTED BASIS AND IS NOT TO BE USED IN ANY WAY DETRIMENTAL TO THE INTERESTS OF PANDUIT CORP.

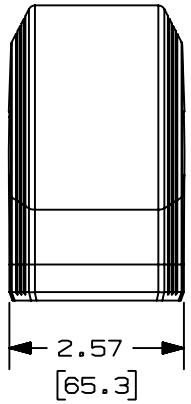

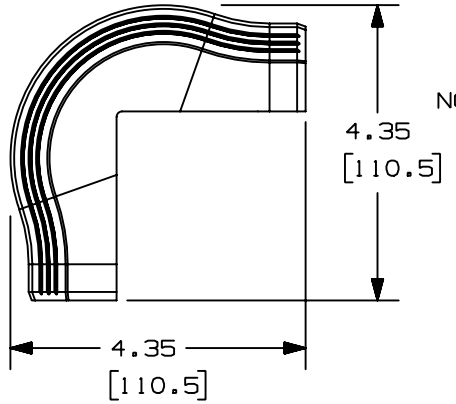

PANDUIT P/N	WEIGHT
T450C	2.54 LB/10 PCS 1152 g/10 PCS

NOTES:

1. THIS FITTING IS INTENDED TO OVERLAP BOTH T-45 COVERS.
2. DIMENSIONS IN PARENTHESES ARE IN METRIC.
3. SEE CURRENT CATALOG FOR ADDITIONAL PART SUFFIXES TO INDICATE COLOR AND OR PACKAGE QUANTITY.

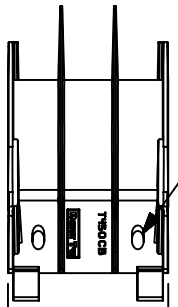

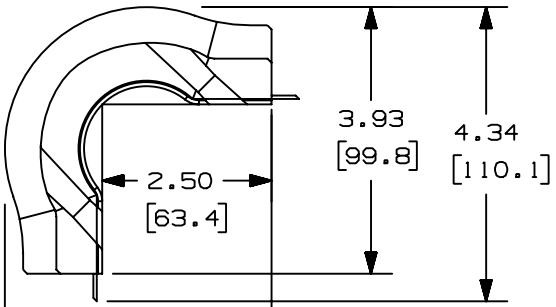

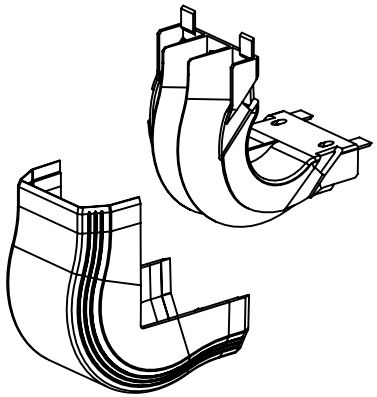

REV	DATE	BY	CHK	DESCRIPTION	ECN	CHK	CUST	SUP
1	01-12-00	RABO	HIW	A. REVISED MOUNTING HOLES	36975-60	HIW	HIW	
R	10-28-99	RABO	HIW	RELEASED TO PRODUCTION.	36975-60	HIW	HIW	

CAD FILENAME/LAYERS: D36975DY_DC_T450C_00B.PRT

PANDUIT CORP. TINLEY PARK, ILLINOIS

T-45 OUTSIDE CORNER FITTING
(T450C)
CUSTOMER DRAWING

UNLESS OTHERWISE SPECIFIED, DIMENSIONAL TOLERANCES ARE:
(.X) ± (.XXX) ±
(.XX) ±.03(.8) ANGLES ±

UNLESS OTHERWISE SPECIFIED, ALL DIMENSIONS ARE GIVEN IN INCHES, THIRD ANGLE PROJECTION.

DRAWN BY: RABO
DATE: 10-28-99
CHECKED BY: BKR
MAT'L: PVC
SCALE: NONE
DRAWING NO.: 36975-60
DWG SIZE: A