THIS COPY IS PROVIDED ON A RESTRICTED BASIS AND IS NOT TO BE USED IN ANY WAY DETRIMENTAL TO THE INTERESTS OF PANDUIT CORP.

A

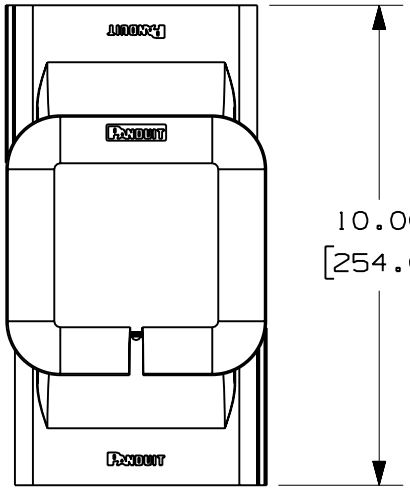

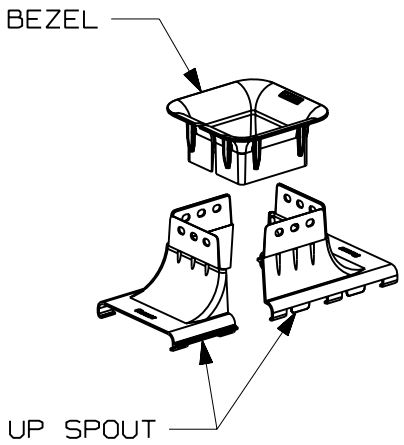

PANDUIT PART NUMBER	WEIGHT
FRUPS4X4	0.55 LB/EACH (248g/EACH)

E

D NOTES:

1. SEE CURRENT CATALOG FOR ADDITIONAL PART SUFFIXES TO INDICATE COLOR AND/OR PACKAGE QUANTITY.
2. THE FIBERRUNNER 4x4 UP SPOUT IS DESIGNED WITH A MINIMUM 2" (50.8) BEND RADIUS TO PROTECT FIBER OPTIC CABLES. THE RADIUSED BEZEL IS DESIGNED WITH A MINIMUM 1" (25.4) BEND RADIUS TO PROTECT FIBER OPTIC CABLES ENTERING OR EXITING THE FITTING.
3. THE FIBERRUNNER 4x4 UP SPOUT INCLUDES: TWO (2) UP SPOUT COMPONENTS, ONE (1) RADIUSED BEZEL
4. DIMENSIONS IN PARENTHESES ARE IN METRIC.

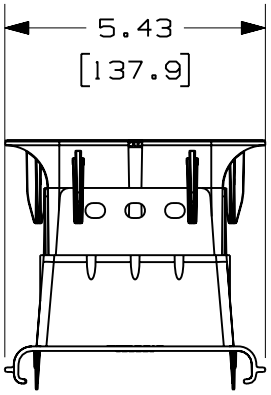

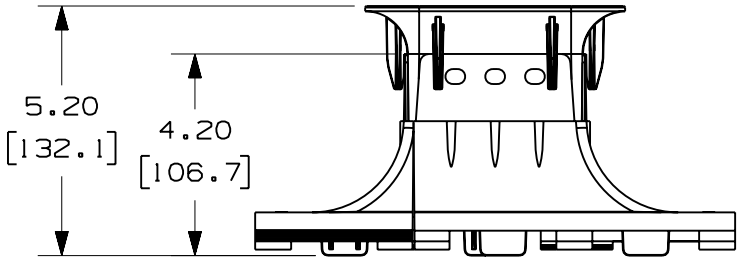

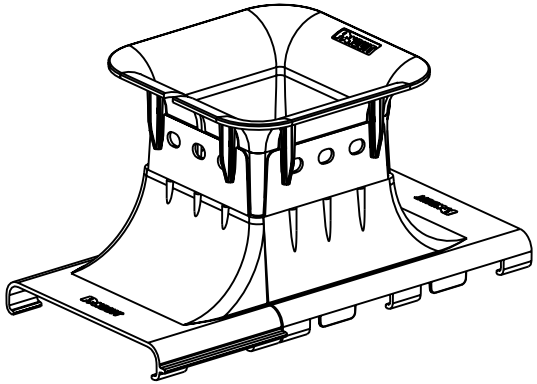

ENG. REF.: D38154BE_DC_FRUPS4X4_01.prt

CAD FILENAME/LAYERS C FRUPS4X4.pdf

PANDUIT CORP TINLEY PARK, ILLINOIS

B FIBERRUNNER 4x4 UP SPOUT (FRUPS4X4)
CUSTOMER DRAWING

UNLESS OTHERWISE SPECIFIED, DIMENSIONAL TOLERANCES ARE:
(.X) ± (.XXX) ±
(.XX) ±.03 (.8) ANGLES ±

UNLESS OTHERWISE SPECIFIED, ALL DIMENSIONS ARE GIVEN IN INCHES, THIRD ANGLE PROJECTION.

DRAWN BY JHNU
MAT'L: ABS
SCALE NONE
DATE 10-12-01
DRAWING NO. 38154-05
DWG A
CHK'D DJWA
SIZE

REV	DATE	BY	CHK	DESCRIPTION	ECN	-	R	CUST	SUP	GMBH
-	--------	---	---	E. REVISED PART WEIGHT	--------		--	--		
-	--------	---	---	D. REVISED GENERAL NOTES C. REVISED CAD FILENAME	--------		--	--		
1	38154-05	DTP	RN	B. REVISED DRAWING TITLE A. REVISED AND REDRAWN	38154-05		RN	RN		