THIS COPY IS PROVIDED ON A RESTRICTED BASIS AND IS NOT TO BE USED IN ANY WAY DETRIMENTAL TO THE INTERESTS OF PANDUIT CORP.

B

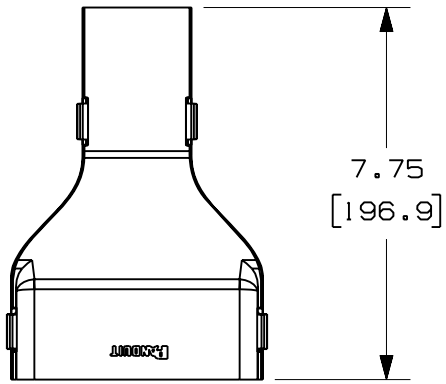

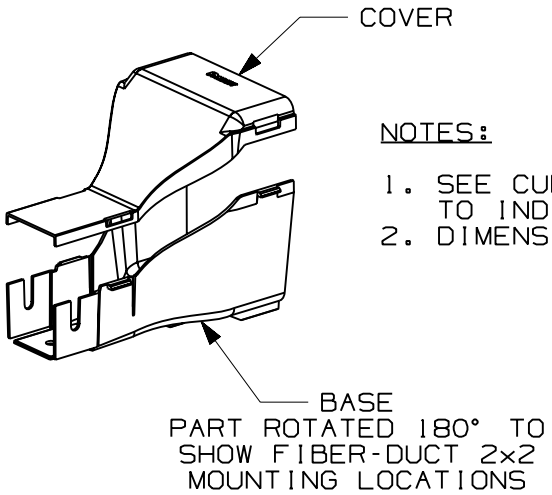

PANDUIT PART NUMBER	WEIGHT
FRRF4FD2	0.44 LB/EACH (201g/EACH)

E

NOTES:

1. SEE CURRENT CATALOG FOR ADDITIONAL PART SUFFIXES TO INDICATE COLOR AND/OR PACKAGE QUANTITY.
2. DIMENSIONS IN PARENTHESES ARE IN METRIC.

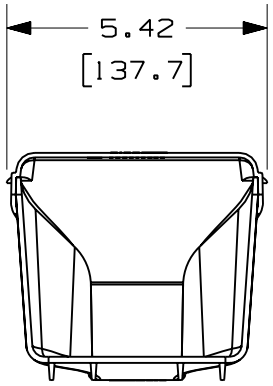

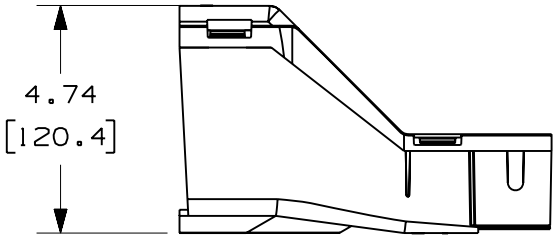

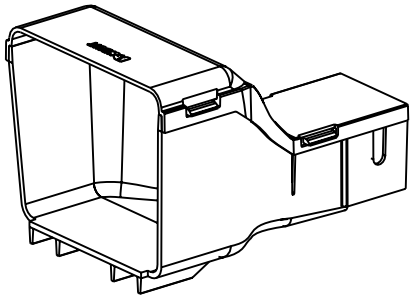

ENG. REF.: D37847DG_DC_FRRF4FD2_01.prt

CAD FILENAME/LAYERS D FRRF4FD2.pdf

PANDUIT CORP TINLEY PARK, ILLINOIS

FIBERRUNNER 4x4 TO FIBER-DUCT 2x2 REDUCER (FRRF4FD2)

C CUSTOMER DRAWING

UNLESS OTHERWISE SPECIFIED, DIMENSIONAL TOLERANCES ARE:
(.X) ± (.XXX) ±
(.XX) ±.03 (.8) ANGLES ±

UNLESS OTHERWISE SPECIFIED, ALL DIMENSIONS ARE GIVEN IN INCHES, THIRD ANGLE PROJECTION.

REV	DATE	BY	CHK	DESCRIPTION	ECN	-	R	CUST	SUP	GMBH
-	--------	---	---	E. REVISED PART WEIGHT D. REVISED CAD FILENAME	--------		--	--		
2	7-13-06	DTP	RN	C. REVISED DRAWING TITLE B. REVISED AND REDRAWN	37847-74		RN	RN		

DRAWN BY JHNU
DATE 7-19-01
CHK'D HIW
MAT'L: ABS
SCALE NONE
DRAWING NO. 37847-74
DWG A
SIZE