THIS COPY IS PROVIDED ON A RESTRICTED BASIS AND IS NOT TO BE USED IN ANY WAY DETRIMENTAL TO THE INTERESTS OF PANDUIT CORP.

A

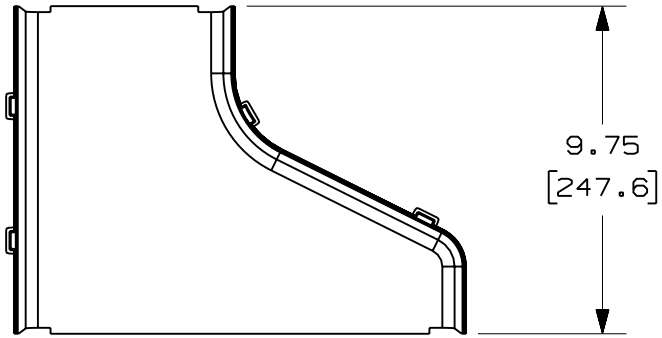

PANDUIT PART NUMBER	WEIGHT
FRRF126L	1.01 LB/EACH (460g/EACH)

E

D NOTES:

1. SEE CURRENT CATALOG FOR ADDITIONAL PART SUFFIXES TO INDICATE COLOR AND/OR PACKAGE QUANTITY.
2. THE FIBERRUNNER 12x4 TRANSITION LEFT WITH 6" EXITS IS DESIGNED WITH A MINIMUM 2" (50.8) BEND RADIUS TO PROTECT FIBER OPTIC CABLES.
3. DIMENSIONS IN PARENTHESES ARE IN METRIC.

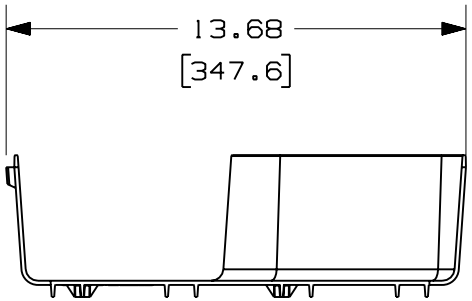

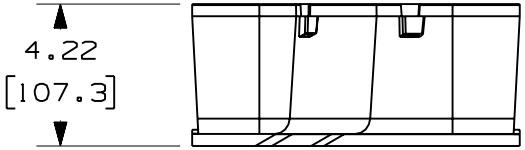

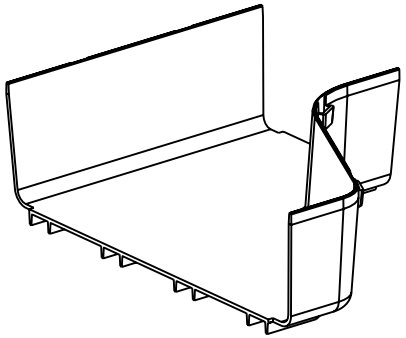

ENG. REF.: D37617XC_DC_FRRF126L_01.prt

CAD FILENAME/LAYERS C FRRF126L.pdf

PANDUIT CORP TINLEY PARK, ILLINOIS

FIBERRUNNER 12x4 TRANSITION LEFT WITH 6" EXIT (FRRF126L)

B CUSTOMER DRAWING

UNLESS OTHERWISE SPECIFIED, DIMENSIONAL TOLERANCES ARE:
(.X) ± (.XXX) ±
(.XX) ±.03 (.8) ANGLES ±

UNLESS OTHERWISE SPECIFIED, ALL DIMENSIONS ARE GIVEN IN INCHES, THIRD ANGLE PROJECTION.

DRAWN BY JHNU
MAT'L: ABS
SCALE NONE
DATE 5-24-01
CHK'D HIW
DRAWING NO. 37617-114
DWG A
SIZE

REV	DATE	BY	CHK	DESCRIPTION	ECN	-	R	CUST	SUP	GMBH
-	--------	---	---	E. REVISED PART WEIGHT	--------		--	--		
-	--------	---	---	D. REVISED GENERAL NOTES C. REVISED CAD FILENAME	--------		--	--		
1	7-13-06	DTP	RN	B. REVISED DRAWING TITLE A. REVISED AND REDRAWN	37617-114		RN	RN		