THIS COPY IS PROVIDED ON A RESTRICTED BASIS AND IS NOT TO BE USED IN ANY WAY DETRIMENTAL TO THE INTERESTS OF PANDUIT CORP.

D

| PANDUIT PART NUMBER | WEIGHT |
|---|---|
| FOV452X2 | 0.24 LB/EACH (109g/EACH) |

H

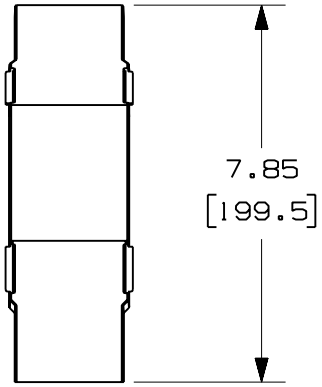


I NOTES:

1. SEE CURRENT CATALOG FOR ADDITIONAL PART SUFFIXES TO INDICATE COLOR AND/OR PACKAGE QUANTITY.
2. THE FIBER-DUCT 2x2 AND FIBERRUNNER 2x2 OUTSIDE VERTICAL 45° ANGLE FITTING IS DESIGNED WITH A MINIMUM 2" (50.8) BEND RADIUS TO PROTECT FIBER OPTIC CABLES.
3. DIMENSIONS IN PARENTHESES ARE IN METRIC.

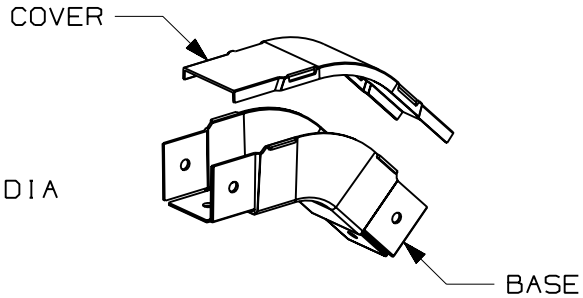


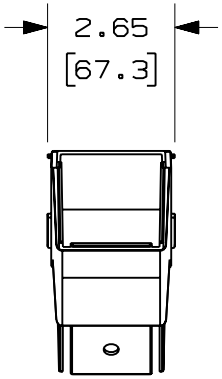


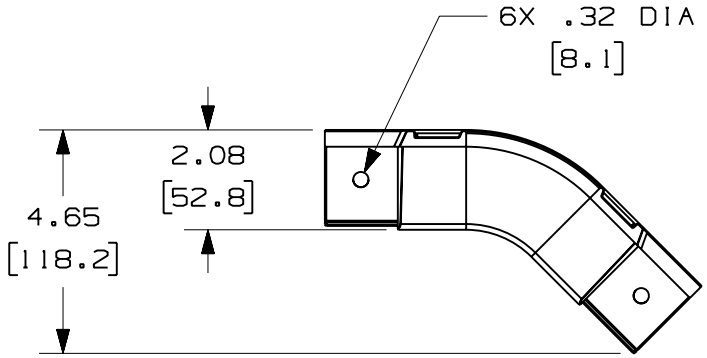


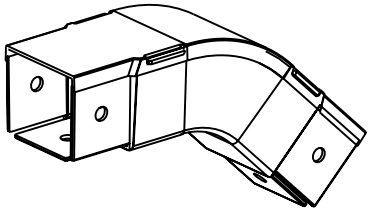

ENG. REF.: D35245BZ_DC_FOV452X2_05.prt

CAD FILENAME/LAYERS E FOV452X2.pdf

PANDUIT CORP TINLEY PARK, ILLINOIS

FIBER-DUCT 2x2 AND FIBERRUNNER 2x2 OUTSIDE VERTICAL 45° ANGLE FITTING (FOV452X2)

F CUSTOMER DRAWING

UNLESS OTHERWISE SPECIFIED, DIMENSIONAL TOLERANCES ARE:
(.X) ± (.XXX) ±
(.XX) ±.03 (.8) ANGLES ±

UNLESS OTHERWISE SPECIFIED, ALL DIMENSIONS ARE GIVEN IN INCHES, THIRD ANGLE PROJECTION.

DRAWN BY TPC | MAT'L: ABS | SCALE NONE

DATE 1-15-97 | DRAWING NO. 35245-26 | DWG A

CHK'D CEF G | SIZE

| REV | DATE | BY | CHK | DESCRIPTION | ECN | - | R | CUST | SUP | GMBH |
|---|---|---|---|---|---|---|---|---|---|---|
| - | -------- | --- | --- | I. REVISED GENERAL NOTES.<br>H. REVISED PART WEIGHT. | -------- | | -- | -- | | |
| - | -------- | --- | --- | G. REVISED MATERIAL.<br>F. REVISED DRAWING TITLE. | -------- | | -- | -- | | |
| 5 | 12-15-06 | MSO | RN | E. REVISED CAD FILENAME.<br>D. REVISED AND REDRAWN. | 34245-26 | | RN | RN | | |