THIS COPY IS PROVIDED ON A RESTRICTED BASIS AND IS NOT TO BE USED IN ANY WAY DETRIMENTAL TO THE INTERESTS OF PANDUIT CORP.

K

O

PANDUIT PART NUMBER	WEIGHT
FCF4X4	0.20 LB/EACH (92g/EACH)

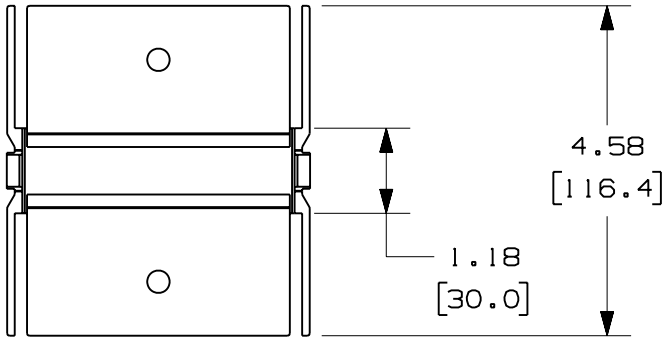

P NOTES:

1. SEE CURRENT CATALOG FOR ADDITIONAL PART SUFFIXES TO INDICATE COLOR AND/OR PACKAGE QUANTITY.
2. DIMENSIONS IN PARENTHESES ARE IN METRIC.

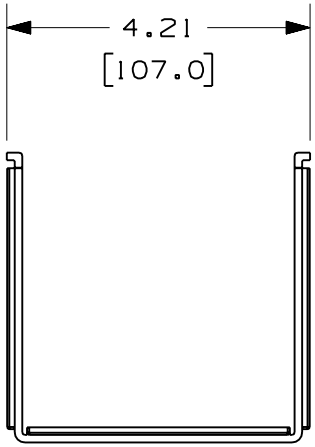

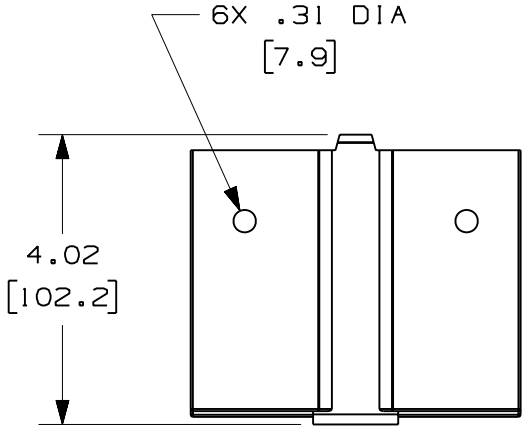

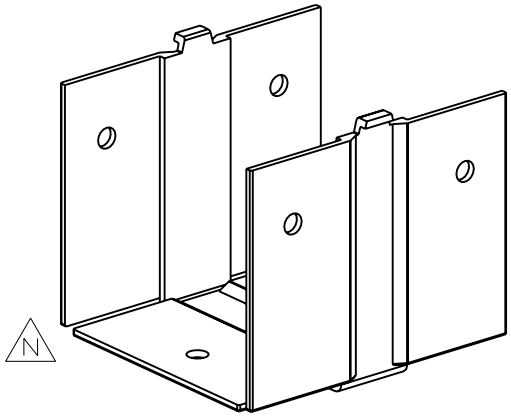

N

ENG. REF.: D35245BH_DC_FCF4X4_06.prt J

CAD FILENAME/LAYERS L FCF4X4.pdf

PANDUIT CORP TINLEY PARK, ILLINOIS

FIBER-DUCT 4x4 COUPLER (FCF4X4)

M CUSTOMER DRAWING

REV	DATE	BY	CHK	DESCRIPTION	ECN	-	R	CUST	SUP	GMBH
-	--------	---	--	P. REVISED GENERAL NOTES.	--------		--	--		
-	--------	---	--	O. REVISED CHART. N. REVISED PART GEOMETRY.	--------		--	--		
-	--------	---	--	M. REVISED DRAWING TITLE. L. REVISED CAD FILENAME.	--------		--	--		
6	6-16-06	MSO	RN	K. REV'D DWG. TO CUR. STAND. J. REVISED AND REDRAWN.	35245-08		RN	RN		

UNLESS OTHERWISE SPECIFIED, DIMENSIONAL TOLERANCES ARE:
(.X) ± (.XXX) ±
(.XX) ±.03 (.8) ANGLES ±

UNLESS OTHERWISE SPECIFIED, ALL DIMENSIONS ARE GIVEN IN INCHES, THIRD ANGLE PROJECTION.

DRAWN BY: DW
MAT'L: ABS
DATE: 1-30-96
CHK'D: CEF
SCALE: NONE
DRAWING NO.: 35245-08
DWG SIZE: A