THIS COPY IS PROVIDED ON A RESTRICTED BASIS AND IS NOT TO BE USED IN ANY WAY DETRIMENTAL TO THE INTERESTS OF PANDUIT CORP.

G

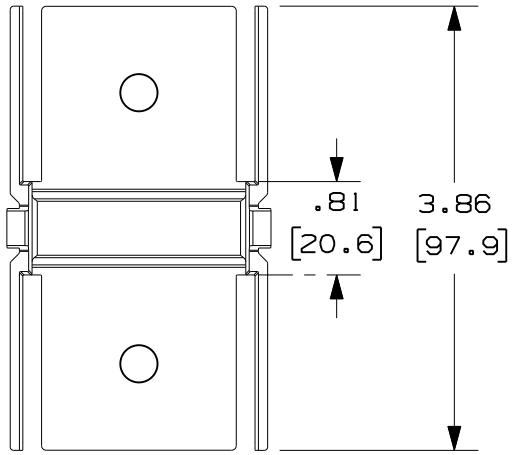

K

PANDUIT PART NUMBER	WEIGHT
FCF2X2	0.07 LB/EACH (32g/EACH)

L NOTES:

1. SEE CURRENT CATALOG FOR ADDITIONAL PART SUFFIXES TO INDICATE COLOR AND/OR PACKAGE QUANTITY.
2. DIMENSIONS IN PARENTHESIS ARE IN METRIC.

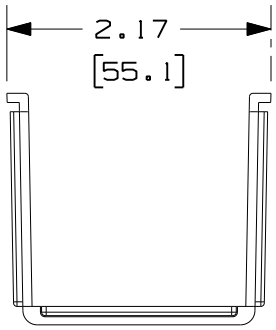

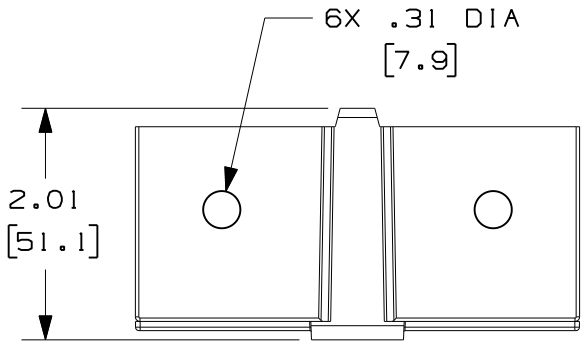

J

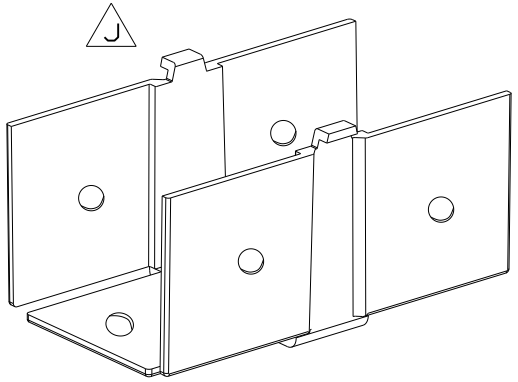

ENG. REF.: D35245CA_DC_FCF2X2_04.PRT F

CAD FILENAME/LAYERS H FCF2X2.pdf

PANDUIT CORP. TINLEY PARK, ILLINOIS

FIBER-DUCT 2X2 COUPLER (FCF2X2)

I CUSTOMER DRAWING

REV	DATE	BY	CHK	DESCRIPTION	ECN	-	R	CUST	SUP
-	- - - -	- -	- -	L. REVISED GENERAL NOTES	- - - -	- -	- -		
-	- - - -	- -	- -	K. REVISED CHART J. REVISED PART GEOMETRY	- - - -	- -	- -		
-	- - - -	- -	- -	I. REVISED DRAWING TITLE H. REVISED CAD FILENAME	- - - -	- -	- -		
4	6-16-06	MSO	RN	G. REV'D DWG. TO CUR. STAND. F. REVISED AND REDRAWN	35245-27	RN	RN		

UNLESS OTHERWISE SPECIFIED, DIMENSIONAL TOLERANCES ARE:
(.X) ± (.XXX) ±
(.XX) ±.03(.8) ANGLES ±

UNLESS OTHERWISE SPECIFIED, ALL DIMENSIONS ARE GIVEN IN INCHES, THIRD ANGLE PROJECTION.

DRAWN BY: RCA
DATE: 1-17-97
CHK'D: CEF
MAT'L: SEE NOTES ABOVE
SCALE: NONE
DRAWING NO.: 35245-27
DWG SIZE: A