THIS COPY IS PROVIDED ON A RESTRICTED BASIS AND IS NOT TO BE USED IN ANY WAY DETRIMENTAL TO THE INTERESTS OF PANDUIT CORPORATION.

PANDUIT PART NO.	BUNDLE DIA MIN - MAX.	DIMENSIONS 'A'	'B'	'C' REF	'D' REF			MATERIAL	COLOR	WEIGHT grams 100 pcs
HCMP06B12-...20	6 - 12	31.6	9.5	19.5	19.0			NYLON 6/6	BLACK	150
HCMP06B12-..130								ACETAL		

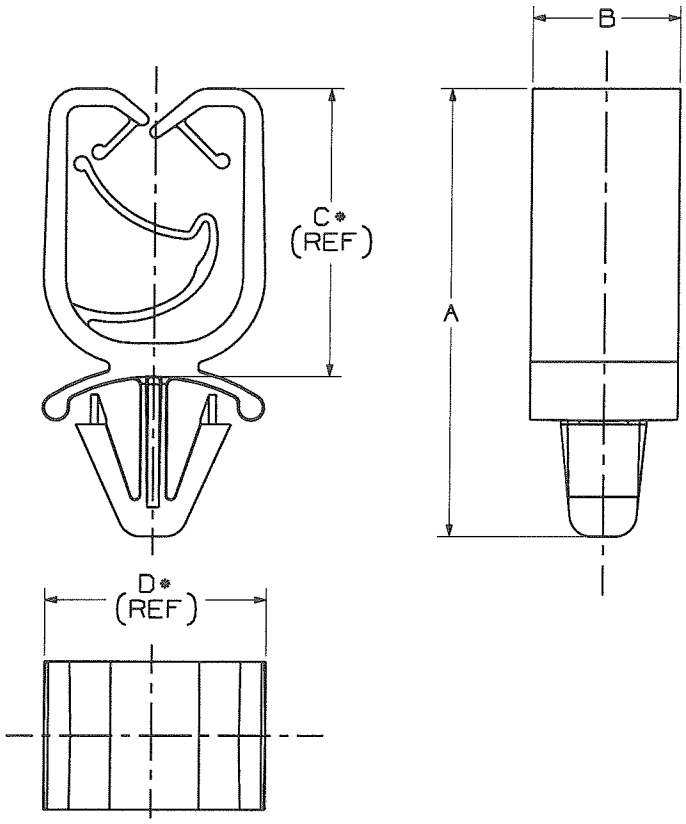

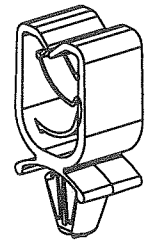

SCALE: FULL

NOTES:

1. SEE CURRENT PRICE SHEET FOR PART NUMBER SUFFIX DESIGNATION FOR PACKAGE SIZE, AND COLOR.
2. (*) DIMENSIONAL VARIANCE IS POSSIBLE DUE TO MOLDING PROCESS RELATED SINK MARKS.
3. APPLICATION SPECIFICATION:
   HOLE DIAMETER: 6.3 - 7.2 mm
   PANEL THICKNESS: 0.6 - 3.0 mm

CAD FILENAME/LAYERS: G01932BE_DC_GB1932BE/04B

PANDUIT CORP. TINLEY PARK, ILLINOIS

HARNESS CLIP WITH PUSH MOUNT ANCHOR

Unless otherwise specified, all dimensions are metric tolerance; ±0.5mm

REV	DATE	BY	CHK	DESCRIPTION	ECN - R		CUST	SUP
04B	7/15/09	ARHA		REMOVED DIMENSIONS, "REF" NOTE FROM DIM 'A'. CHANGED LABELS, DIM A FROM 31.5 TO 31.6.	GB1932BE	04B	KLN	
3	4/29/03	JAD		COMPLETELY REVISED, REMOVED GERMAN TEXT	GB1932BE	3		

DRAWN BY: JAD
DATE: 6-6-98
CHK'D: KLN
MAT'L: SEE TABLE
SCALE: NONE
DRAWING NO.: GB1932BE
DWG SIZE: A